Geo Kelly

OFFSHORE OIL SPILL ECOLOGICAL DAMAGE ASSESSMENT PLAN FOR FISHERIES

The National Marine Fisheries Service

Northeast Fisheries Center

Narragansett Laboratory
Narragansett, RI 02882

February 6, 1978
Narragansett Laboratory Reference No. 78-04

CONTENTS

	Page
Introduction	1
Research Programs, National Marine Fisheries Service, Northeast Fisheries Center	2
1. Resource Assessment Division	6
1.1 Resource Surveys Investigation	6
1.2 Age and Growth Investigation	8
1.3 Fishery Statistics Investigation	8
1.4 Fisheries Socioeconomics Investigation	9
1.5 Sandy Hook Investigation	9
1.6 Fisheries Analysis Investigation	9
2. Marine Ecosystems Division	10
2.1 Ichthyoplankton Investigation	10
2.2 Benthic Dynamics Investigation	11
2.3 Plankton Ecology Investigation	11
2.4 Larval Physiology Investigation	12
2.5 Apex Predators Investigation	12
2.6 Oceanography Investigation	13
2.7 Ecosystem Dynamics Investigation	13
3. Resource Utilization Division	14
3.1 Shellfish Resource Development Investigation	14
3.2 Finfish Resource Development Investigation	15
3.3 Resource Engineering Development Investigation	15
3.4 Product Standardization Investigation	15

Page

3.5 Product Quality Investigation. 16

3.6 Product Safety Investigation 16

4. Environmental Assessment Division 16

4.1 Environmental Chemistry Investigation. 17

4.2 Biological Oceanography of Stressed Environments Investigation. 17

4.3 Physiological Effects of Pollutant Stress Investigation. . 18

4.4 Behavior of Marine Fishes and Invertebrates Investigation. 19

4.5 Coastal Monitoring, Assessment, and Prediction Investigation. 20

4.6 Coastal Ecosystems Investigation 20

5. Aquaculture Division. 21

5.1 Spawning and Rearing of Mollusks Investigation 21

5.2 Aspects of Nutritional Requirements of Mollusks Investigation. 21

5.3 Aquacultural Genetics Investigation. 22

5.4 Control of Molluscan Disease Investigation 22

6. Pathobiology Division 22

6.1 Disease and Environmental Stress Investigation 22

6.2 Comparative Pathobiology Investigation 23

6.3 Health of Ocean Finfish and Shellfish Investigation. . . . 24

7. Manned Undersea Research and Technology Program 25

8. National Systematics Laboratory 25

9. Atlantic Environmental Group. 25

Proposed Projects 27

Ichthyoplankton Survey - MARMAP Survey I. 28

Bottom Trawl Survey Operations - MARMAP Survey II 30

Page

Demersal Food Chain Investigations. 33

Physiological and Biochemical Effects of an Oil Spill on Selected Fish and Shellfish. 35

Histopathological Effects of an Oil Spill on Marine Organisms . 37

Hydrocarbon Analyses of Fish, Shellfish, Zooplankton. 39

The Genetic Effects of an Oil Spill on Developing Fish Embryos. 41

Toxicity Studies: The Effects of Oil on Developing Fish Embryos and Larvae. 43

Phytoplankton and Other Microorganisms. 45

Fishery Oceanography: Environmental Studies. 47

Budget. 49

Summary 50

Appendices

I MARMAP Survey I Operations 51

II MARMAP Survey II Operations. 59

III NEFC-Task Development Plans - FY 1980. 66

IV Physiology-Biochemistry, Milford, Conn.. 70

INTRODUCTION

The success of any effort to assess the environmental impact of an oil spill depends largely on having adequate baseline data and being able to conduct long-term investigations. The studies initiated at the time of a spill can answer questions regarding immediate effects of the spill. These are necessary. However, it is the long-term sublethal impacts of chronic exposures of an ecosystem to petroleum hydrocarbons that need to be evaluated. Such effects can be detected or recovery measured only through long-term monitoring.

The Northeast Fisheries Center of the National Marine Fisheries Service carries out marine ecosystem research off the Northeast coast including the Gulf of Maine, Georges Bank and the Mid-Atlantic Bight. In addition to providing assessments of the status of fish stocks, information is also obtained on the physiological condition or health of the marine ecosystem. Population estimates are obtained largely through interviews with fishermen and analyses of fish catches combined with fishery independent survey information. Surveys of fish and ichthyoplankton are carried out through the MARMAP (Marine Resource, Monitoring, Assessment and Prediction) program. There is also a growing concern about the effects of marine pollution, not only on the yield of fisheries resources, but also on the health of human populations. Current studies of pollutants in the marine environment are site specific and of short duration. Through the Ocean Pulse program the NEFC coordinates its studies and the studies of other groups to determine the wide, long-range effects of marine pollution on the ecosystem and to distinguish between effects due to contaminants and those due to natural factors.

These two programs, MARMAP and Ocean Pulse, are carried out by six principal Divisional elements located within the NEFC. They are Resource Assessment, Marine Ecosystems, Resource Utilization, Environmental Assessment, Aquaculture, and Pathobiology. These activities are carried out at six laboratories: Woods Hole, MA; Gloucester, MA; Narragansett, RI; Milford, CT; Sandy Hook, NJ; and Oxford, MD. The Atlantic Environmental Group, Manned Undersea Research and Technology program and National Systematics Laboratory support the divisional investigations.

In addition to long term monitoring of fishery resource distribution, abundance and health, the NEFC also has the capability of making short-term risk analyses of an oil spill through the expertise of the Atlantic Environmental Group and the Fishery Oceanography Investigation of the Marine Ecosystem Division. Long-term environmental information on currents, eddies, winds, Gulf Stream meanders and warm core eddies along the Slope and Continental Shelf are used to make predictions on the expected movement and fate of an oil spill. Through these predictions it is possible to plan the appropriate short- or long-term studies to assess the impact of a spill.

RESEARCH PROGRAMS
National Marine Fisheries Service
Northeast Fisheries Center

Research to support fisheries management focuses on predicting changes in the size, composition, and structure of the fisheries resources off the Northeast coast. This research is carried out largely through the MARMAP program. MARMAP information, when combined with data on the effects of natural and man-made environmental factors, permits the prediction of the production of fish stocks. Relevant social, economic, and/or ecological factors are incorporated into these estimates.

The principal elements of MARMAP include resource surveys, analyses of commercial and recreational fish catches, fishery oceanography, and fishery engineering. Each is necessary, but none of them is in itself sufficient for resource assessment. Data analysis tasks combine the results of surveys, catch statistics, biometric data (age, growth, fecundity, recruitment, and mortality rates) plus information on environmental conditions and food chain dynamics to produce updated stock assessments.

Two types of MARMAP Surveys are currently being conducted. One type of survey (S-I-Ichthyoplankton Appendix I) monitors changes in distribution and abundance of fish eggs and larvae. These data are used to estimate size of spawning stocks and to forecast annual recruits. Fish are sensitive to environmental changes during their early life stages, and the mortality for each year class can affect future harvests. These survey operations are conducted cooperatively with the USSR, Poland, Canada, FRG and GDR on a bimonthly basis in the Atlantic. A detailed list of cooperative surveys for 1978 is shown in Figure 1.

A second type of survey focuses on the abundance and distribution of fish and shellfish species which live at or near the bottom when they reach harvestable size, (e.g., cod, flounder, scallop, lobster, crab, and shrimp). Bottom survey operations (S-II-Ground Fish Appendix II) are conducted with several foreign nations in the Northwest Atlantic from Greenland to Cape Hatteras (Figure 2), and under contract with the State of South Carolina from Cape Hatteras to the Florida Keys. Two NOAA fleet vessels, the Albatross IV and the Delaware II, support MARMAP surveys. Surveys are also conducted by charter vessels from states, universities, and private industry.

Fishery Analysis

Assessing the condition of fisheries resources and making forecasts requires analysis of data collected from commercial and recreational fisheries and from resource surveys. These statistical analyses of population dynamics and ecology make possible the measurement of fishing

Figure 1. TENTATIVE CRUISE SCHEDULE OF NEFC JANUARY - SEPTEMBER FY 1978

		1	2	3	4	5	6	7	8	9	10	11	12	13	14	15	16	17	18	19	20	21	22	23	24	25	26	27	28	29	30	31
JAN	ALBATROSS IV																Begin	78-0X Winter			Herring Survey - Brown (Azarovitz)											
	DELAWARE II																				Brown (Azarovitz)											
	ARGUS (USSR)					78-01	Shell	fish Resource Assessment											78-01	(I) Squid-Mackerel-Herring Survey - Brown (Azarovitz)												
FEB	ALBATROSS IV													78-01	Larva		Fish Survey -			Sherman (Grosslein)												
	DELAWARE II	Shell	Res. Assess.	cont.	Brown		Azarovitz								78-02		Ichthyoplankton Survey -			Sherman (Smith)												
	ARGUS (USSR)	78-01	cont.	78-01	(II)	Squid-Mackerel-Herring Survey-Brown								(Azarovitz)									78-01	(III) Squid-Mackerel-Herring Survey								
	ANTON DOHRN (FRG)																						78-01	Juvenile Herring and								
	WILCZNO (POLAND)																															
MAR	ALBATROSS IV	Larval Fish Survey cont.									78-02	Buoy	Study - Sherman (Wright)							•	78-03	(I)	Bottom Trawl Survey - Brown (Azarovitz)									
	DELAWARE II	78-01	cont.	Ichthyoplankton Survey				Sherman	(Wright)																							
	ARGUS (USSR)	78-01	(III)	cont. -	Brown (Azarovitz)											78-02	MARMAP I		Secondary	Primary	Productivity - Sherman (Brookhaven)										78-03	Larva
	ANTON DOHRN (FRG)	Larval	Fish	Survey	- Brown		Sherman	(Azarovitz		Smith)																						
	WILCZNO (POLAND)																															
	EISBAR (GDR)																															
APR	ALBATROSS IV			•	78-03	(II)	Bottom Trawl Survey - Brown (Azarovitz)										•	78-03	(III)	Bottom Trawl Survey - Brown (Azarovitz)											
	DELAWARE II													Shipyard																		
	ARGUS (USSR)	78-03	cont.		Fish	Survey - Sherman (Grosslein -						Sherman)								78-03	(MARMAP I	Secondary	Primary)					78-03	Primary			
	WILCZNO (POLAND)																				(Productivity Survey - Sherman) (Brookhaven)											
	EISBAR (GDR)																															
	RESEARCHER										78-04	Ocean Pulse - Pearce (Reid)															78-04	Ocean Pulse -	Pearce			
MAY	ALBATROSS IV	78-03	(III)	cont. -				•	78-05	(IV)	Bottom Trawl Survey - Brown (Azarovitz)																					78-06
	DELAWARE II													Shipyard																		
	ARGUS (USSR)	78-05	cont.		Productivity-Ichthyoplankton Survey - Pearce - Sherman (Thomas - Smith - Wright)																			78-06	MARMAP I	Secondary						
	RESEARCHER	78-04	cont.	(Reid)																												
JUN	ALBATROSS IV	78-04	cont.	Oceanographic Survey -					Sherman (Wright)												78-07	Primary	Productivity -			Ichthyoplankton						
	DELAWARE II								Shipyard																							
	ARGUS (USSR)	Productivity cont.				78-07	Larval Fish Survey - Sherman (Grosslein)																									
		Survey - Sherman (Brookhaven)																														
JUL	ALBATROSS IV	78-05					Survey cont.				Pearce		Sherman (Thomas		Smith	Wright)									78-06	Gear	Measurement			Prod		
	DELAWARE II										78-03	Ocean Pulse Survey			Pearce	(Reid)									•	78-04	(I)	Bottom	Trawl	Survey		
AUG	ALBATROSS IV	78-06	cont.	(Azarovitz)				•	78-07	(II)	Bottom Trawl Survey				Brown	(Azarovitz)				•		78-07	(III)	Bottom Trawl	Survey		Brown		Azarovitz			
	DELAWARE II	78-06	(II)	cont.	Brown (Azarovitz)			78-04	(III)	Bottom	Trawl	Survey			Brown	(Azarovitz)																
SEP	ALBATROSS IV	78-07	(III)	cont.								78-09	Buoy	Study -	Sherman	(Wright)		78-09	Primary	Productivity - Pearce (Thomas)												
	DELAWARE II				•	78-09	(I)	Bottom Trawl Survey -				Brown	(Azarovitz				•	78-09	(II)	Bottom Trawl Survey - Brown (Azarovitz)												

*Ichthyoplankton also collected

	1	2	3	4	5	6	7	8	9	10	11	12	13	14	15	16	17	18	19	20	21	22	23	24	25	26	27	28	29	30	31

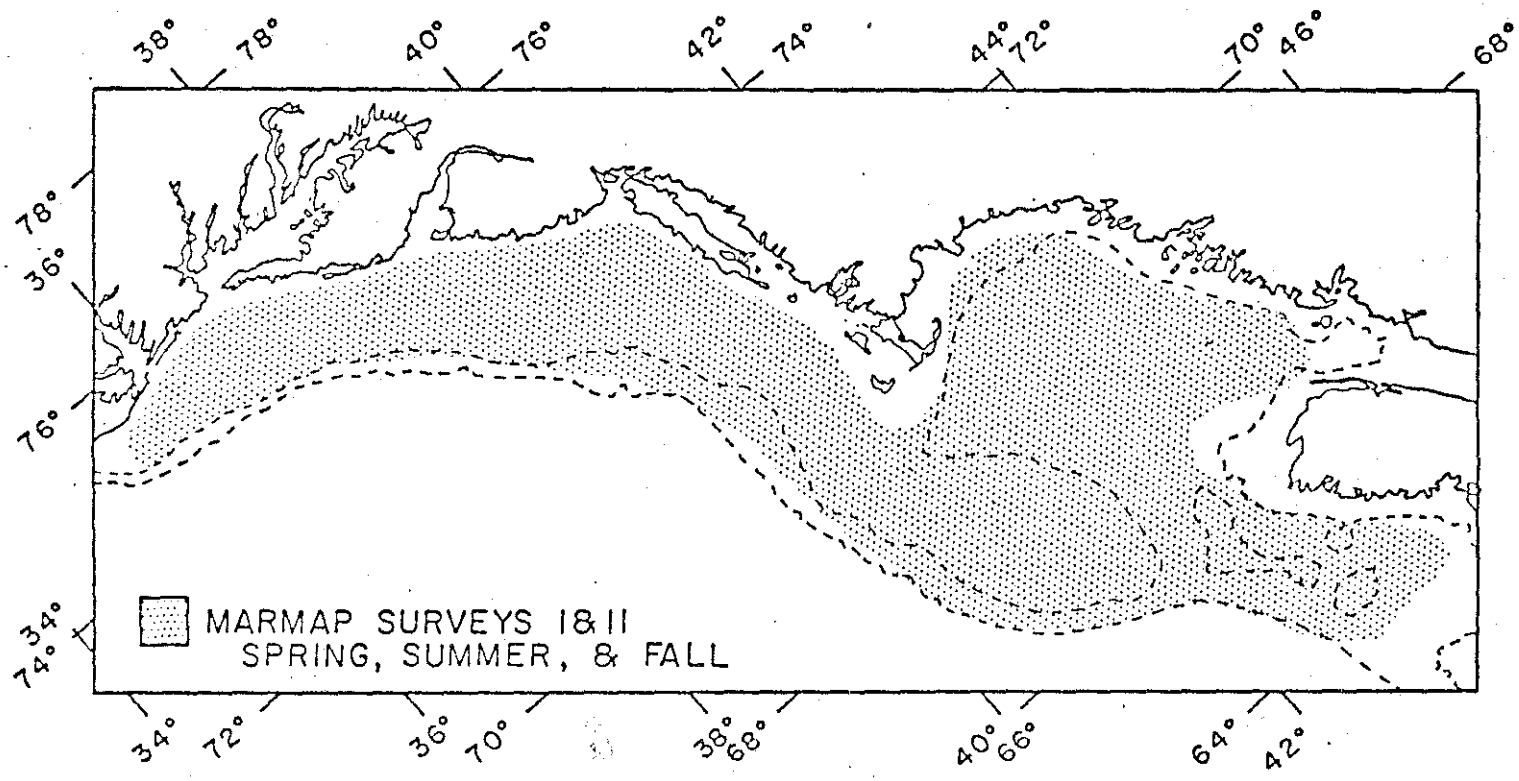
38°
78°
40°
76°
42°
74°
44°
72°
70°
46°
68°
78°
36°
76°
34°
74°
MARMAP SURVEYS I&II
SPRING, SUMMER, & FALL
34°
72°
36°
70°
38°
68°
40°
66°
64°
42°

Figure 2.

and natural mortality rates, and of annual changes in abundance caused by fishing or environmental changes. These analyses are used to construct yield curves and population models, to make stock abundance forecasts, and to produce status-of-stock reports for input to management decisions. MARMAP reports include two nationwide summaries, one on the annual conditions of the principal stocks off the US coasts that provides assessment information on 31 species and groups encompassing 99% of the volume and value of the US marine fishery resource. The other is a summary of annual environmental changes that have actual or potential effect on the distribution and abundance of fish stocks. Assessments are based on a series of investigations which begin with the identification of a resource, its distribution, and number of component stocks and procedes through measurement of mortality rates and other parameters. The synthesis of such data provides the basis for yield forecasts and management recommendations. MARMAP assessments are provided to the newly established Fishery Management Councils, international, State-Federal and industry commissions, and associations charged with the development or management of the various fisheries. Assessments are made both on individual species and on the total biomass. In addition, approximately 400 technical and scientific reports are produced annually which provide assessments of fish species and the more abundant plant and invertebrate populations that support the fish stocks of the region.

Fishery Oceanography

Changes in physical and chemical properties of the ocean (currents, temperature, nutrients, etc.) affect not only long-term yields and annual abundances of fish stocks, but also their distribution. The impacts of man's activities (fishing, pollution, environmental modification) and of natural environmental processes on the annual production of fish crops need to be accurately predicted. MARMAP oceanography activities include the analyses of physical, chemical, and biological oceanographic data collected during MARMAP surveys and from oceanographic research activities of other agencies. Special MARMAP studies are conducted with the USSR to obtain organic production and larval survival data and to develop ecosystem models for the Northwest Atlantic.

Physiological Effects of Pollution

Research for environmental management provides information on the natural variability and pollution caused by man's activities in the Northwest and Middle Atlantic. This information obtained by NMFS/NEFC program called Ocean Pulse comes from conducting baseline studies of the occurrence of marine contaminants and their effects on commercially, recreationally, and/or ecologically important species, and from monitoring changes in water movements, temperature, and dissolved oxygen concentrations. These baseline studies and monitoring efforts often include sewage sludge dump sites, dredge spoils, industrial chemicals, power plant thermal effluents, and oil spills, in order to determine the effects of site-specific contamination on the health of the marine ecosystem and its fisheries resources.

Ocean Pulse monitors the physiological condition of marine communities in both clean and impacted areas up to six times annually (Figure 3). This includes physiological, biochemical, behavioral, genetic and histopathologic studies as well as systematic monitoring of pertinant environmental variables. Changes in condition due to stress caused by pollution can be detected, characterized and evaluated against the long-term monitoring by the MARMAP program.

Short-term site-specific studies carried out in the wake of an oil spill must be integrated with and compared to long-term population monitoring baseline data supported by physiological effects studies if the impact of acute events on an ecosystem are to be evaluated.

The principal research activities of NEFC are conducted within a divisional matrix. A brief description of each of the Center operational elements is given below and a summary is presented in Appendix III.

1. RESOURCE ASSESSMENT DIVISION

The role of the Resource Assessment Division is to assess the effects of harvesting on fisheries resources. To do this assessment, the Division estimates the relative and absolute abundances; spatial and temporal distributions; and harvestable numbers, sizes, and weights of finfish, shellfish, and crustaceans in the Northwest Atlantic; and determines the productivity of these renewable marine resources from an ecosystem standpoint. To accomplish these tasks, the Division analyzes both domestic and foreign data from commercial fisheries, recreational fisheries, and research surveys. Additional economic and biological studies provide data for modeling the fisheries to aid in their management for optimum sustainable yield.

1.1 Resource Surveys Investigation

Each fall, spring, and summer the Resource Surveys Investigation surveys with bottom trawls the fisheries resources of the continental shelf from Nova Scotia to North Carolina. These surveys are part of the Marine Monitoring, Assessment, and Prediction (MARMAP) Program's Survey-II effort to document the relative abundance and distribution of these resources in the area. Supplementary surveys of the area occur regularly, many as cooperative efforts with other nations that fish in the Northwest Atlantic. These supplementary surveys often gather information that is not gathered in the semiannual surveys such as the seasonal/areal distribution of surf clams.

The standard data that are recorded on these various surveys are the length, weight, age, and maturity of the fish, and the temperature and depth of the water where captured. Ichthyoplankton samples and other hydrographic data are also often collected. Such data reveal changes in the size, composition, or structure of the fisheries resource. Some of the important species for which these data are

Figure 3. Tentative Sampling locations for the Ocean Pulse Program

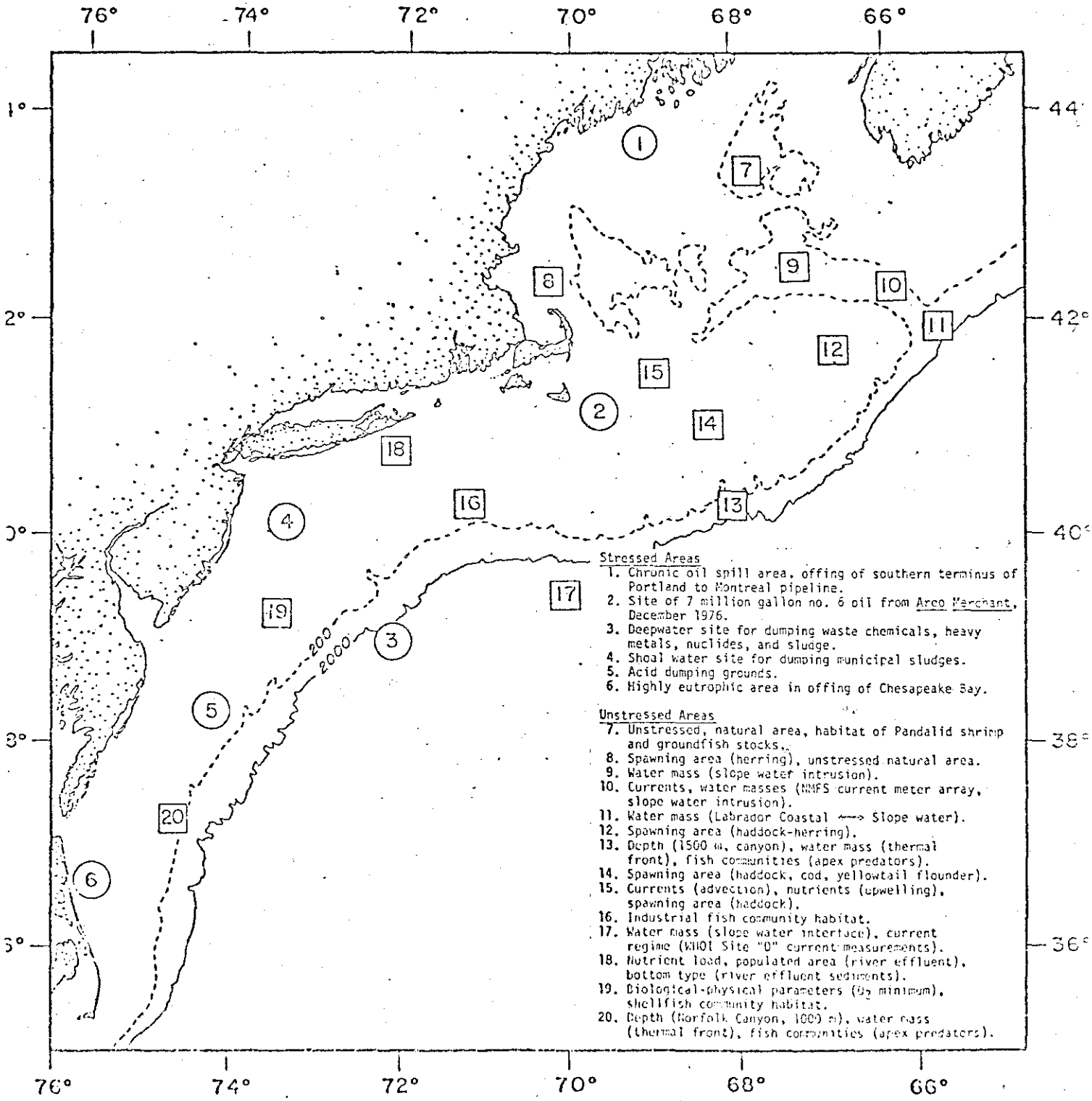

collected are haddock, Atlantic cod, yellowtail flounder, silver hake, red hake, white hake, Atlantic herring, Atlantic mackerel, spiny dogfish, long-finned squid, and American lobster.

To complement the bottom trawl surveys, the investigation works on the development of hydroacoustical methods to survey pelagic fishes. Such work ranges from the study of the echo strength and pattern of a given size and species of fish, to the correlation of the hydroacoustical survey of an area with the actual net catches of fish from that area.

Finally, the investigation researches and develops systems for improving the efficiency of such surveys. One system currently under study will automatically log data while at sea. This automatic data logger records data systematically from on-board, automatic sensors, and stores them on magnetic tape in a form that can be directly interpreted by digital computers once on shore. Such a system permits an instantaneous correlation of biological data with physical and chemical data.

1.2 Age and Growth Investigation

The objective of this investigation is to determine species/stock growth rates and the age compositions of both the harvested and total populations. Information on this aspect of the population dynamics of various species/stocks is needed to assess productivities of species/stocks of the Northwest and Middle Atlantic. The investigation also works on the development of systems to aid in its research such as a computerized system for automatically determining age and growth from scales and otoliths. Among the species aged in this investigation are bluefish, butterfish, haddock, yellowtail flounder, Atlantic herring, Atlantic cod, silver hake, redfish, pollock, white hake, and Atlantic mackerel.

1.3 Fisheries Statistics Investigation

Fisheries statisticians perform both data reduction and data analysis. These data come from catch and effort statistics of research surveys and recreational and commercial fisheries, and from biological statistics of fish sampled in such surveys and fisheries. Foreign surveys and fisheries also contribute data for the reduction and analysis processes. With this information the investigation assesses the size, composition, and structure of the individual fish stocks and the total fish biomass of the Northwest and Middle Atlantic.

These assessments form the basis for a finer analysis. The investigational staff analyzes the effects of different fisheries management regimes such as optimum sustainable yield on the stocks and biomass. The researchers also evaluate the effects of different levels of catch and effort on the fishing mortality of a given

stock. Since these analyses and evaluations often require the analysis and evaluation of the ecosystem as a whole, this investigation relies heavily upon other investigations for information on the various aspects of the ecosystem.

1.4 Fisheries Socioeconomics Investigation

The Fishery Conservation and Management Act of 1976 requires that the optimum sustainable yield of a fishery be determined by modifying the estimate of maximum sustainable yield by "relevant economic, social, or ecological factors." The Fisheries Socioeconomics Investigation establishes and maintains a socioeconomic data base and conducts the analyses needed to define optimum sustainable yields, surpluses, and allocations of fisheries resources to both commercial and recreational interests. The investigation develops economic profiles for various fisheries, including the economic value of the fishery, the recreational and commercial income of the fishery, and the capacity for harvesting and processing the catch. Econometric models are also constructed to evaluate the economic consequences of various management options. Sociological factors are a significant component of these models.

1.5 Sandy Hook Investigation

Several of the Resource Assessment Division's key people operate out of the Sandy Hook Laboratory. These people serve as a critical link to personnel and problems in the Middle Atlantic area by performing a variety of the duties with the Division in that area. Currently, these individuals are analyzing data from a creel survey of party and charter boats in New Jersey to estimate biostatistics from that important recreational fishery and to develop improved survey techniques. They are also monitoring specific fisheries, such as a study of the Middle Atlantic fisheries for the Atlantic cod and an investigation of fecundity and other biological parameters for the Atlantic mackerel and the Atlantic croaker. Sandy Hook individuals are also deeply involved in developing mid-water trawling procedures for monitoring inshore summer fish abundances.

1.6 Fisheries Analysis Investigation

This investigation focuses on modeling both the population and ecosystem dynamics of the commercially, recreationally, and ecologically important fishes in the Northwest and Middle Atlantic. Of the traditional fields of population dynamics--population size, age-growth, mortality-yield, and stock-recruitment--the first three undergo primary study by other investigations in the Division (Resource Surveys, Age and Growth, and Fisheries Statistics, respectively). The Fisheries Analysis Investigation integrates the results of these studies and primarily or secondarily investigates all four fields.

For the ecosystem dynamics approach, the staff considers the effects of natural and man-made environmental factors on interspecific competition and any resultant changes in the size, composition, or structure of the biomass. Socioeconomic interactions developed by the preceding investigation are also included in these fisheries models to aid fisheries managers in determining optimum yields.

2. MARINE ECOSYSTEMS DIVISION

Studies of the population dynamics of each species within a fishery do not by themselves provide the necessary information to manage effectively a multispecies fishery, especially one in which the sought-after species occupy different trophic levels. It is important to understand the population dynamics of individual species, but it is also important to understand the effect that the change in the distribution, abundance, and age structure of one species has on the other species in the ecosystem.

The 50% decrease in the number of finfish off the Northeast and Middle Atlantic States during the past decade, principally due to increased fishing effort, raises some significant questions. Does the reduction due to fishing of major predatory species such as Atlantic mackerel, haddock, Atlantic herring, yellowtail flounder, and Atlantic cod release major prey species such as certain zooplankters to be consumed by shorter-lived, faster-growing, smaller-sized, and less desirable predatory species? And, what are the probabilities of a return of over-exploited fish species to former abundance levels and former habitats?

Studies in the Marine Ecosystems Division address these questions. The studies focus on the critical links between the principal sources of fish food and the survival, recruitment, and productivity of the principal fish stocks sought after by fishermen. The availability of fish stocks to domestic fishermen is an end product of a complex series of events and interactions located: at the ocean bottom with the benthic food of groundfishes; in the water column with the zooplanktonic food of pelagic fishes; and in the changing physics and chemistry of moving water and weather conditions.

2.1 Ichthyoplankton Investigation

Ichthyoplankton studies deal with the community dynamics of larval fishes in the Continental Shelf waters from western Nova Scotia to northern North Carolina. To understand these community dynamics, the ichthyoplankton biologists are investigating the factors that control species dominance in larval fish communities, including the influences of competition, predation, and hydrography. The staff has the principal responsibility for preparing annual forecasts of changes in the abundance levels of the principal fish species in the area.

Another area of responsibility of the investigation is to conduct and coordinate the ichthyoplankton surveys of NOAA's Marine Monitoring, Assessment, and Prediction Program (MARMAP). This coordination involves interaction with American universities and state agencies participating in the program, as well as several foreign nations (Poland, Soviet Union, East Germany, and West Germany). The investigational staff serves in a liaison capacity and monitors the ichthyoplankton sorting in the Polish-American Plankton Sorting Center in Szczecin, Poland.

The staff provides annual abundance indices of ichthyoplankton and the spawning biomass of selected species. They develop taxonomic keys for the identification of larval fishes, prepare monography on diagnostic features of fish developmental stages from egg through juvenile, and coordinate all NEFC taxonomic studies with the National Systematics Laboratory.

2.2 Benthic Dynamics Investigation

The Benthic Dynamics Investigation monitors and predicts changes in the kinds, abundances, and availability of food organisms for such bottom-dwelling fishes as Atlantic cod, haddock, and yellowtail flounder, and for such open-water fishes as Atlantic herring and Atlantic mackerel. The investigation studies the consequences of such changes in benthic food organisms on the distribution and production of demersal and pelagic fish stocks in the Georges Bank Gulf of Maine, and Mid-Atlantic Bight ecosystems. Staff members identify and enumerate important benthic food organisms, and define their environmental requirements and interrelationships with important fish stocks in the area. Another area of interest is the study of the trophodynamic relationships between pelagic and demersal species, focusing on the role of competition as a contributor to species dominance.

2.3 Plankton Ecology Investigation

The thrust of this research is the study of the influences of the abundance and availability of zooplanktonic prey on the major pelagic and demersal fish populations on the Continental Shelf, including such commercially, recreationally, and ecologically important fish stocks as the Atlantic mackerel, Atlantic herring, silver and red hakes, pollock, and sand launce. Specific research activities include: (1) the preparation of bimonthly indices of zooplanktonic abundance from western Nova Scotia to Cape Hatteras; (2) investigation of the mesoscale and microscale relationships between zooplanktonic production and larval fish

survival; (3) monitoring areal and seasonal changes in zooplanktonic prey availability along the migration routes of Atlantic herring and Atlantic mackerel as part of a study of the factors controlling areal and seasonal availability and abundance of the biomass of these stocks; (4) investigation of the impact of changes in the composition and abundance of the zooplanktonic biomass on the productivity of fish in the Georges Bank, Gulf of Maine, and Mid-Atlantic Bight ecosystems; and (5) monitoring effects of seasonal and annual changes of currents and water masses on the distribution and abundances of zooplankton and their predators.

In addition, staff personnel serve as the principal liaisons in the ongoing joint studies of secondary production with the Soviet Union, poland, and West Germany, as well as oversee the operations of the Polish-American Plankton Sorting Center. The staff also develops and operates an electronic data processing system for quality-controlled data storage and analysis of zooplankton and ichthyoplankton data collected by the NEFC and other cooperating groups.

2.4 Larval Physiology Investigation

The Larval Physiology Investigation studies the energetics of larval fishes. Through laboratory experimentation and field studies the larval fish physiologists develop theories of larval growth and survival. Laboratory experiments look at, among other things, the effects of changes in the densities of zooplanktonic prey on the survival rates of larval fishes under controlled temperature conditions. Other studies focus on the linkages, both theoretical and actual, between the survival of larvae and the recruitment of harvestable-sized individuals into the fishery for such popular species as haddock, Atlantic cod, yellowtail flounder, winter flounder, and scup.

2.5 Apex Predators Investigation

This NEFC research effort looks at the effects of changes in the biomass of large predators, including sharks, tunas, and billfishes, on the commercially, recreationally, and ecologically important stocks of finfishes in the Gulf of Maine, Georges Bank, and the Mid-Atlantic Bight ecosystems. Species-specific studies of apex predators deal with age-growth relationships, mortality rates, population recruitment, migratory behavior and patterns, and trophodynamics as they relate to requirements for growth and reproduction. The investigational staff works closely with fishermen by: (1) conducting extensive tagging experiments in cooperation with recreational and commercial fishermen from Maine to North Carolina; (2) serving as the principal liaison between the NEFC and recreational fishermen in the same region; and (3) monitoring the annual changes in abundances of certain

shark populations through in-depth studies of catch data from fishing tournaments conducted off the Northeast and Middle Atlantic States. In addition, the staff coordinates cooperative studies on apex predators with other governmental agencies, private groups, and foreign countries such as Poland, Canada, West Germany, and the Soviet Union.

2.6 Oceanography Investigation

Migrations of fish are not random, but are initiated and guided by environmental cues. Although fisheries scientists have been moderately successful in describing the movements of pelagic and demersal species in response to environmental changes, they have been less successful in forecasting the specific times and places (patterns) of fish movements. To forecast such fish movements, the Oceanography Investigation monitors currents, temperatures, salinities, and movements of water masses and water types to understand the influences of such oceanographic conditions on movements of those species that contribute significantly to the fish biomass (Atlantic herring, Atlantic mackerel, Atlantic cod, etc.). Research focuses on those environmental conditons that optimize survival and growth of the dominant finfishes in the Gulf of Maine, Georges Bank, and the Mid-Atlantic Bight ecosystems.

Observations are made on two scales, mesoscale and microscale. The mesoscale MARMAP surveys from western Nova Scotia to Cape Hatteras occur six times a year. Such mesoscale observations are made at sufficient intervals to monitor the movements of such fishes as the Atlantic herring, Atlantic mackerel, and Atlantic cod, and their zooplanktonic prey. Microscale studies are conducted within a given water mass to define the oceanographic factors controlling the dispersal and survival of fish eggs and larvae at selected spawning sites. Even slight changes in the transport of larval fishes by currents can influence the size of a species' entire incoming year class. Studies are also conducted on the effects of warm-core rings from the Gulf Stream and fluctuations in slope water on the oceanography of the three ecosystems mentioned above.

The investigational staff also serves as the principal liaison between NEFC fisheries oceanography studies and cooperative investigations conducted with other governmental agencies, private groups, and foreign nations (Soviet Union, West Germany, East Germany, and Canada). Additionally, periodic reports of anomalous oceanographic conditions are provided to the fishing industry and other interested parties.

2.7 Ecosystem Dynamics Investigation

This investigation develops recruitment models for both pelagic and demersal fish species, including haddock, Atlantic cod,

yellowtail flounder, Atlantic herring, and Atlantic mackerel. Models of larval fish behavior are also developed to assess the effects of variations of larval and juvenile growth and mortality on these stock-recruitment relationships. The information generated by these studies permits the development of candidate models of the marine ecosystem. The models are then compared with the empirical structure, standing crop, and production of specific finfish and benthic invertebrate communities. The models of selected population processes and biological interactions are used to provide practical advice to fisheries managers in the Northwest and Middle Atlantic.

Multispecies models are developed that take into account the energy requirements of the major fish populations under different simulated management regimes. These studies will lead to the development of more efficient management strategies for dealing with the three principal marine ecosystems of interest, the Gulf of Maine, Georges Bank, and the Mid-Atlantic Bight. Initial emphasis is on the development of a mass energy model for Georges Bank. Refinements of this model will be made over the next several years.

3. RESOURCE UTILIZATION DIVISION

This major NEFC resource component assists the American fishing industry and consuming public in increasing the quantity and improving the quality of finfish and shellfish products. By working closely with representatives of the fishing industry and consuming public, the Resource Utilization Division applies available technology towards increasing the production of commercially processed fish and finds ways to use the large variety of relatively unused marine species. To improve the quality of seafoods and assure their safety, staff members study the changes that occur during storage, and design various handling processing, and preservation techniques that reduce adverse changes and enhance desirable characteristics in the product. The Division also coordinates the fisheries engineering and conservation gear development programs within the NEFC.

3.1 Shellfish Resource Development Investigation

The primary purpose of this investigation is to develop new or modified methods of handling, processing, and preserving shellfish for increasing yields and improving economics. Current activities include the development of: (1) a new technique for roller extraction of crabmeat that covers all phases of processing and product quality; (2) a method for identifying crabmeat to species; (3) handling and processing methods for underutilized offshore crab species (red crab, rock crab, and Jonah crab); (4) a test to determine the amount of shell fragments in crabmeat; and (5) more efficient processing methods for squid including handling at sea, grading, skinning, eviscerating, stripping, and new product

development. A secondary purpose of the investigation is to provide technical advice to the blue crab and oyster industries.

3.2 Finfish Resource Development Investigation

This investigation attempts to develop or modify methods of handling, processing, and preserving all types of finfish for increasing yields and improving economics. The investigation contracts with industry to evaluate the effectiveness and commercial potential of prototype machines to handle silver hake, or whiting, that are smaller than can now be processed economically.

Another study seeks to upgrade the value of silver hake by developing new products and new product forms. Studies of three new silver hake products are currently underway. The investigation guarantees some fresh New England fillets as "US Grade A" to determine the effort needed to assure consumers of quality, how much consumers will pay for the guarantees, and the cost of such guarantees. Other tasks include research into the effects of feeding animals with irradiated fish, and on the future of irradiators in fish preservation.

3.3 Resource Engineering Development Investigation

This investigation is a mechanical engineering support of fisheries development activities. Since there are presently no mechanized processing lines for underutilized species like silver hake, long-finned squid, red hake, goosefish, and ocean pout, the staff adapts and modifies presently available machines or designs and builds new machines to accomplish this task. Ongoing projects include: (1) developing a device to meter additives to minced flesh; (2) designing and building a machine for eviscerating and skinning squid; (3) designing and building a machine for grading any species into several size categories; and (4) designing and building a machine for sorting a mixed bag of fish into three selected size categories. This Investigation is also concerned with the development of fishing gear to improve efficiency, selectivity, and safety, and to protect the quality of the catch. Typical developments include a quick-release branchline clip for longlining, an improved trawl door hook-up, a trap that discontinues its ability to operate when it is lost, and a removable deck-block mounting pad.

3.4 Product Standardization Investigation

The development of standards and specifications of quality for fisheries products is the principal goal of the Product Standardization Investigation. Current efforts involve the development of standards for minced fish blocks, shrimp, and fillets, and fulfilling assignments for the "Codex" international standards as designated by NMFS. Standards are developed according to the following steps: (1) conduct an industry survey; (2) prepare a draft of

proposed standards and distribute to interested parties; (3) resolve any comments and publish the proposed standards in the "Federal Register"; (4) after amendment of the proposed standards based on the comments, republish them in the "Federal Register"; and (5) upon finalization of the standards, make available instructions and other inspection aids for using them. Another goal of the investigation is to recommend or develop if necessary standardized analytical procedures for evaluating the criteria of the standards.

3.5 Product Quality Investigation

This investigation tries to solve the problem of quality deterioration of fisheries products that results in resource and economic losses. The diminishing supply of frozen Atlantic cod blocks has stimulated industry interest in minced silver hake as a substitute. However, minced silver hake can become rancid and tough during frozen storage. This task minimizes this quality deterioration through proper packaging, storing at optimal temperatures, using chemical additives, or combinations thereof. Certain parameters such as fat content which vary seasonally are studied to determine their effects on storage stability. Because the mincing operation provides an excellent chance for microbial contamination, surveys are made on the microbial and organoleptic qualities of commercially minced blocks to aid in establishing standards.

3.6 Product Safety Investigation

Within this study investigators determine the possible chemical hazards in fisheries products that can result from processing or environmental conditions. One class of chemicals under study is the volatile N-nitrosamines, potent carcinogenic compounds that have been found in many varieties of cured foodstuffs ranging from pork products to fish. These chemicals are formed by the action of nitrite preservatives on amines occurring naturally in food. Marine fish can contain significant quantities of amines which can react with nitrites encountered either during processing or possibly from industrial contamination of their environment. In previous N-nitrosamine studies, hot-smoked sablefish, hot-smoked salmons, and hot-smoked whitefishes were tested to determine the effectiveness of sodium nitrite in inhibiting the outgrowth and toxin production of the bacterium *Clostridium botulinum*, types A and E. After defining the inhibitory range of sodium nitrite, more detailed experiments were conducted to show the minimum level of nitrite needed to inhibit the bacterium. Samples from these experiments are now being analyzed by a multidetection method that identifies 14 volatile N-nitrosamines found in foods.

4. ENVIRONMENTAL ASSESSMENT DIVISION

This NEFC effort concentrates on the physical, chemical, and biological interactions which affect the estuarine, coastal, and marine

environments of the Northwest and Middle Atlantic. Research stresses the impact of man's activities on the productivity and biomass of benthic, demersal, and pelagic organisms. The Division emphasizes the effects of these activities on the interrelations between biotic and abiotic elements of the environment. Results of these studies document the impact of man on commercial and recreational stocks and their forage species. Behavioral, physiological, and biochemical studies determine both subtle shifts in normal behavior and biological processes which can indicate sublethal but significant damage to resource reproduction, recruitment, feeding, migration, and other activities.

4.1 Environmental Chemistry Investigation

This investigation studies the temporal and spatial distributions of toxic chemicals, their environmental life spans, their cycles through food chains, and their effects upon the biology, habitats, and uses of marine resources. Emphasis is currently on heavy metals and petroleum-derived and halogenated hydrocarbons like DDT and PCBs. To monitor the presence of trace metals, routine measurements of their concentrations are taken in various finfish and shellfish species from intertidal and coastal waters; in apex predators collected from Deepwater Dumpsite 106; in water; and in sediments, organic debris, and other solid components of the marine environment. Measurements are also taken of trace metals in various tissues, gametes, and other cell types from organisms exposed to known lethal and sublethal levels of toxic metals. The hydrocarbon research consists primarily of the measurement of petroleum-derived and halogenated hydrocarbons in Middle Atlantic and Gulf of Maine species in waters contaminated by urban, industrial, and agricultural wastes and runoffs. The data gathered by this effort are used to model the movement of these potentially toxic materials through benthic, demersal, and pelagic food webs.

4.2 Biological Oceanography of Stressed Environments Investigation

The objective of this study is to determine the effects of urban areas upon adjacent estuarine, coastal, and marine ecosystems and their species. This program began in the Lower Hudson Estuary and New York Bight Apex and has expanded to cover the entire Continental Shelf from Cape Hatteras to Georges Bank. Studies under various conditions of river flow, temperature, planktonic blooms, and metabolic activity will show the extent and magnitude of the effects of New York City and other metropolitan areas on Continental Shelf waters. The investigation studies phytoplankton productivity and standing stocks, species ecology and diversity, nutrient levels, hydrography, rates of water column and seabed oxygen consumption and organic matter decomposition, bacteriology, and contaminant identification. Surveillance and laboratory activities stress the frequent recurrence of phytoplankton blooms.

Emphasized in these activities are nutritional and physiological capacities of causative organisms, and phytoplankton succession and bloom development in response to nutrient supplies from pollution.

The work of the investigation is broken up into four different, but interrelated efforts. First are studies of production rates, photoassimilated carbon cycles, and phytoplankton standing stock variations. The investigational staff relates the data from these studies to man-made and natural sources of nutrients and pollutants in the Mid-Atlantic Bight. Ultimately, this research will define the relationships between primary productivity and the abundance of finfish and shellfish resources on the one hand, and between waterborne toxins and the distribution of such resources on the other hand. Second, analyses take place on the causes and effects of plankton blooms. Among these analyses are studies of the macronutrient and micronutrient requirements of dinoflagellates involved in red tides, fish kills, and other bloom-induced phenomena. The investigation monitors and describes such plankton blooms and associated physical and chemical factors to determine the impacts upon various marine resources. Third, the staff looks into oxygen utilization by sediments and waters polluted with such organic materials as sewage sludge, dredging spoil, and petroleum. The uptake rates are correlated with temporal and spatial distributions and standing stocks of benthic, demersal, and pelagic organisms. And fourth, the investigation determines the cell numbers and identities of significant aerobic bacteria in the Mid-Atlantic Bight. Such determinations qualitatively document the health of this ecosystem and reveal the functions of microorganisms in the marine environment. The metabolic rates of this heterotrophic activity are compared, particularly on a long-term basis, with the presence of various organic contaminants and the occurrence of various environmental factors.

4.3 Physiological Effects of Pollutant Stress Investigation

This investigation determines how and to what degree pollutants, individually and in combination, affect various marine animals at different life stages. New laboratory rearing techniques permit studies of pollutant effects upon embryonic, larval, and juvenile stages, as well as upon the adult stage which has been the focus of most past research.

The gradual reduction or elimination of a species by sublethal levels of pollutants is no less serious than the demise caused by lethal levels. Possibly it is more serious, since sublethal effects are less likely to be detected and traced to their source before irreparable damage has occurred. The decreased productivity of fish stocks due to sublethal pollutant exposures that impair growth, reproduction, and survival is a principal concern of this investigation.

These effects are slow and do not cause immediately obvious changes in populations, but cause subtle alterations in physiological functions and behavior that affect migration patterns, responses to temperature change, egg viability, and/or growth rates. The results are slow changes in reproductive rates and population sizes. Because chemical contaminants occur in the marine environment at higher concentrations than those that have been shown to cause adverse effects in the laboratory, it is probable that these pollutants are now adversely affecting the productivity of important fish, shellfish, and crustacean populations.

Accordingly, staff members research the physiology and biochemistry of selected species of marine animals common to the Mid-Atlantic Bight and other Northwest and Middle Atlantic environments, and determine experimentally the effects of heavy metals on their survival, development, and normal life functions. They have established tolerance ranges and the sublethal concentrations at which metabolic disturbances can be detected in embryonic, larval, juvenile, and adult stages of mollusks, crustaceans, and finfish, particularly those of commercial, recreational, and ecological importance. Biological models may be useful in future evaluations of pollutant-related stresses in marine environments, and this investigation will provide the necessary input for these models.

This investigation is also concerned with those microorganisms capable of growing under reduced oxygen tension (anaerobic conditions) in the fisheries environment and on living marine resources. The major goal is to determine the presence of pollutant and disease-producing anaerobes in the fisheries environment, their persistence and cycling through the food chain, and other possible interrelated toxin transfer mechanisms and chemical conversion mechanisms which can adversely affect fish stocks and their habitats.

4.4 Behavior of Marine Fishes and Invertebrates Investigation

To define the physical, chemical, and biological requirements of marine fishes, this investigation studies species behavior and ecology in both the field and laboratory. Research concerns the role of various environmental factors in the life habits of selected species, how man-made and natural modifications of the environment affect those life habits, and the capabilities of species to detect and avoid potentially lethal conditions. Field studies focus on feeding habits, habitat requirements, relationships with different substrates, seasonal patterns of activity, distributions, and interspecific and intraspecific relationships of such inshore demersal species as tautog, cunner, and winter flounder. These studies help to define life habits and environmental requirements of various life stages of each species. Laboratory researchers record normal activity, feeding, and social

behavior (aggression, territoriality, and reproduction) in such species as adult tautog, cunner, red hake, juvenile bluefish, and other finfish, as well as physicosensory and chemosensory responses in such brachyuran crustaceans as blue crabs. Data from this research define the effects of environmental conditions and stresses on life habits, recruitment, and survival. Another task pools previous research findings on normal behavior to gauge the effects of selected environmental stresses on schooling, feeding, and activity in juvenile striped mullet and bluefish, and on territoriality, feeding, reproduction, and activity in adult tautog and brachyuran crustaceans.

4.5 Coastal Monitoring, Assessment, and Prediction Investigation

The Coastal Monitoring, Assessment, and Prediction (COMAP) Investigation routinely surveys the fish, plankton, and benthos of the inner coastal region (20-100 meters in depth) from Block Island Sound to the Bay of Fundy. Among other things, these monitoring surveys assess the impact of man's activities on the inshore environment and its organisms. Specifically, staff members make these assessments by noting changes in the distribution and relative abundance of fish and invertebrate species in response to changes in the physical and chemical environment. These environmental changes range from oil spills, to thermal pollution, to disposal of dredging spoils. Investigators also collect data on recruitment mechanisms for such commercially important species as American lobster, Atlantic herring, Atlantic mackerel, and winter flounder. They also assess the inshore distribution and relative abundance of species sampled semiannually in NEFC offshore bottom trawl surveys.

A significant and increasing portion of COMAP activities involves serving as an NEFC liaison to individuals and groups (such as the New England Fisheries Development Program) with diverse interests in inshore waters. COMAP cooperates with outside scientists in assessing fish stocks off the Northeast and Middle Atlantic States, and reviews research proposals by the private sector for siting and impact studies for power plants, dredging spoil disposal areas, and other operations that could potentially adversely affect fish stocks and other renewable marine resources.

4.6 Coastal Ecosystems Investigation

The major objective of this investigation is to collect baseline geological, physical, chemical, and biological data to assess changes in benthic and demersal populations in Long Island Sound, Gulf of Maine, and Mid-Atlantic Bight estuaries and coastal zones. The program is integrated among state, interstate, and other federal research organizations. In the estuarine research, the investigation emphasizes population studies. Long Island and

Block Island Sounds, Raritan and Delaware Bays, and numerous smaller embayments of the Mid-Atlantic Bight are the primary study areas. The investigational staff works on the interrelationships between various benthic and demersal species that live all or part of their lives in the estuaries. The staff also models the pollutant pathways from contaminated embayments to coastal zones.

In the separate but related research on coastal zones, the investigation studies those offshore populations in the Mid-Atlantic Bight that are affected by ocean disposal of sewage sludge, dredging spoils, and industrial wastes; by energy development; and riverine runoff from the Hudson and Delaware Rivers. This population information helps to document the causes and effects of extensive coastal anoxic conditions. The investigation also compiles data on contamination of Northwest and Middle Atlantic waters by various bordering states, and provides this information to various international organizations involved with the fisheries resources and water quality of the area.

5. AQUACULTURE DIVISION

The effects of nutrition, pollutants, and genetic processes upon growth and survival of commercially important marine species are the research responsibility of this Division. Studies concern the algal food nutrition, genetic selection, and disease and predator control associated with larval molluscan culture.

5.1 Spawning and Rearing of Mollusks Investigation

Oyster culture methods are adapted for the hatchery cultivation of other commercially important bivalves. This research and development program progresses logically from gametogenesis, through spawning the adults, rearing the larvae and growing the post-set stage immediately after metamorphosis, to growing the juveniles. The bay scallop and surf clam are currently being studied because of their potential for aquaculture.

5.2 Aspects of Nutritional Requirements of Mollusks Investigation

A priority of the research into commercial aquaculture methods is the development of an economical and nutritional supplement to the diets of animals in an aquacultural program. The investigation contributes to that cause by: (1) assisting in problem solving; (2) introducing innovative procedures; (3) studying phytoplankton food-chain organisms; and (4) researching molluscan food utilization. Another task is the support of all the molluscan research projects by providing a high quality and large quantity of algal food.

5.3 Aquacultural Genetics Investigation

This investigation develops genetic information to answer the questions of industry on how to develop profitable strains of hatchery shellfish. The investigation also advises industry on various aspects of aquacultural breeding without specific requests. A major goal of the program in aquacultural genetics is the creation of special gene pools at NMFS laboratories or under NMFS auspices. Industry and consumers would benefit from the improved management of wild shellfish beds that would result from the increased knowledge of the genetic potentials of wild shellfish populations based on studies of the special gene pools.

5.4 Control of Molluscan Disease Investigation

This investigation's work is an integral part of the NEFC's research on shellfish aquaculture. However, by the nature of the scientific expertise needed to conduct the investigation's research activities, the research is supervised by the Pathobiology Division. Thus, two Divisions are directly involved in this investigation.

Molluscan disease research focuses on the prevention, diagnosis, and control of disease, particularly in hatcheries and nurseries. Objectives are to: (1) monitor, isolate, identify, and culture micropathogens, and characterize their pathologic effects; (2) determine mechanisms of micropathogen transmission, penetration, infectivity, and host specificity; (3) study qualitatively and quantitatively micropathogen activity and host responses; and (4) evaluate the use of various chemicals including ozone gas to deactivate biotoxins and control micropathogens. A primary use of these methods is in the study of diseases of larval mollusks. The investigation seeks to develop physical methods, including ionization, to eliminate microbial pathogens and toxins in larval mollusks. The investigators on this project also provide consultation to industry and Sea Grant institutions involved in aquaculture.

6. PATHOBIOLOGY DIVISION

The Division works with all aspects of diseases, infectio us and noninfectious, biotic and nonbiotic, that affect marine resources. Not only is there an emphasis on the impacts of diseases on marine populations, but also on the influence of natural and man-made environmental factors on the occurrence of those diseases.

6.1 Disease and Environmental Stress Investigation

Disease, environmental changes, and pollutant stress act synergistically with those factors that induce death in marine poikilotherms. For this reason the investigation studies the pathologic

effects on marine organisms caused by natural and man-made changes to marine ecosystems. Such man-made changes include habitat modification by ocean waste disposal, dredging activities, recreational activities, and petroleum development. Field and laboratory research establishes the causes of death, abnormality, and tissue and cellular pathosis (anatomical, physiological, and biochemical) in the affected marine organisms. The investigation concentrates on five specific research topics to achieve these goals. First, fin rot disease is studied in the New York Bight. Researchers try to determine the prevalence and pathogenesis of fin rot in winter and summer flounders in the Bight. Trawl surveys and entrapment studies provide the diseased specimens for histopathological examination. Second, immunity in marine fishes is researched. The two principal goals of this study are to determine whether pollution reduces the immunity of fishes to bacterial disease, and to correlate fish diseases with raised levels of serum antibodies for specific bacteria in the fishes. The study operates through examination of antibody responses and cellular defenses of fishes in both the field and the laboratory. A variety of immunological and cytochemical tests analyze systems of fish immunity under the combined stress of pollutants and bacteria. Third, the microstructure of normal and physiologically stressed crabs, fish, and mollusks is studied. Normal and pathologic tissues of such species as blue crabs, winter flounder, striped bass, and Atlantic mackerel are studied by electron microscopy. In addition to examining organisms with naturally occurring diseases, the staff also conducts experiments on new pathological and immunological procedures. Fourth, the investigation catalogues, maintains, and provides curatorial and custodial services for a permanent National Registry of Marine Pathology. This registry contains type specimens, photographs, and published literature on pathology in marine and estuarine poikilotherms. Additions to the registry are gathered by solicitation of the scientific community. Materials are available for study by qualified scientific and technical workers. And fifth, diseases of commercially and recreationally important fish species are studied histologically. The first objective of this research is to determine the causes of mortality in various fishes. The second objective is to analyze the lethal and sublethal effects of introduced chemical contaminants upon various species and life stages of fish.

6.2 Comparative Pathobiology Investigation

Infectious and noninfectious diseases limit the abundance, distribution, and utilization of marine organisms. Therefore, a knowledge of the causes and effects of these diseases is fundamental for successful management of fisheries resources and habitats. In this investigation, normal and abnormal organs, tissues, and cells are intensively observed for comparative histology, cytology, and epizootiology. Light and electron microscopy reveal pathologic conditions induced experimentally, occurring

naturally, or found in aquacultural processes. Micropathogen activities are defined and described quantitatively and qualitatively and infectious agents and microparasites are identified and characterized.

To achieve these goals one of the first steps is to study the health status of mollusks, crustaceans, and fish. For mollusks, the investigation studies the microstructure of tumors, describes the morphology and cytopathology of oyster viruses with light and electron microscopy, and describes the microparasites of domestic and exotic species. For crustaceans, most of the effort is on blue crabs, rock crabs, and shrimp. Research on the crabs involves: (1) the study of the epidemiology of viral infections; (2) the study of the transmission mechanisms of protozoan viruses, and of such protozoa as Paramoeba; and (3) the preparation of an atlas of blue crab histology. With respect to shrimp, other crabs, and lobsters, the staff concentrates on the pathobiology of the exoskeleton and gills.

Another area of study within the investigation concerns the microfauna associated with fish, crustaceans, and mollusks. Staff members isolate and identify the protozoa of both the water column and sediments of the New York Bight, identify gill-fouling organisms of New York Bight crustaceans by microscopic examination of stained gill sections, and determine the prevalence of sporozoan parasites in the blood tissues of Atlantic mackerel and of other parasites in other fish.

6.3 Health of Ocean Finfish and Shellfish Investigation

The integrity of oceanic ecosystems is directly reflected in the health and well-being of their inhabitants. Except in the most unusual circumstances, the presence of healthy animals signifies a healthy encironment and vice versa. Thus, the purpose of this investigation is to assess comparatively the health of several selected target species of ocean fish, crustaceans, and mollusks from selected ocean sites.

The presence and abundance of infectious microorganisms (viruses, bacteria, and protozoa), some of which also produce highly toxic substances, are magnified in unbalanced ecosystems. These organisms can cause disease and abnormalities among resident species either directly or indirectly as secondary invaders acting in concert with other environmental stresses. Similarly, the health of ocean species can be profoundly affected by man-introduced noninfectious agents, such as petroleum and its byproducts, various agricultural and industrial pollutants, and substances leached from dredged materials.

Approaches used to ascertain the health of target species will include: (1) studies of fish immune systems to determine if the

animals produce the necessary defense mechanisms to combat or overcome disease (that is, these mechanisms operate normally and how they are affected by natural and man-induced stresses); (2) observations on the prevalence of gross and microscopic lesions and descriptions of same on the tissue, cellular, and subcellular levels, using light and electron microscopy; (3) cytochemical and clinical chemical analyses of cellular and humoral responses to infectious and noninfectious diseases; and (4) use of microbial and cellular systems (bacteria, fungi, and animal cell lines) for mutagenic and carcinogenic assays and for indicators of pollution (viruses, bacteria, and protozoa).

7. MANNED UNDERSEA RESEARCH AND TECHNOLOGY PROGRAM

The Manned Undersea Research and Technology (MURT) Program functions as both an autonomous and support research group. MURT deals with sampling needs and ecological studies that are difficult, costly, or impossible with conventional surface research vessels. MURT's dive team works to: (1) develop an efficient research diving capability to and beyond the edge of the Continental Shelf with conventional and advanced diving technology and research submersibles; (2) survey the macrobenthos of the outer Continental Shelf; (3) study *in situ* the early life stages of Atlantic herring and the ecological factors affecting their eggs and larvae; (4) define the sampling efficiency of standard surface-oriented sampling hardware; and (5) monitor the abundance and ecology of bottom-oriented fauna and flora at specific locations on the New England Continental Shelf as an index to ocean health.

8. NATIONAL SYSTEMATICS LABORATORY

The National Systematics Laboratory is administered by the NEFC, but serves the entire Fisheries Service. It studies the systematics of commercially, recreationally, and ecologically important marine organisms. Included in these studies are projects on taxonomy to facilitate the identification of species, on anatomy to document species classifications, and on the characterization of biogeographic complexes. Emphasized are epipelagic, deep pelagic, and benthic fishes; peneid shrimps; and crabs and other decapods.

9. ATLANTIC ENVIRONMENTAL GROUP

The Atlantic Environmental Group (AEG) supports the research programs of the NEFC and other NOAA components operating in the Atlantic Ocean by monitoring and studying environmental conditions and by analyzing environmental data acquired from various governmental agencies, private and academic institutions, and archives. Analyses performed by the AEG include portrayal and interpretation of oceanic and atmospheric

data for environmental and fisheries forecasting. The AEG also develops techniques, models, and indices for such forecasting. And, it advises NMFS's Office of Scientific and Technical Services, NOAA's Office of Marine Environmental Protection, and the National Ocean Survey's Ocean Dumping Research and Monitoring Office on marine environmental studies.

PROPOSED PROJECTS

In the event of an acute oil spill on the Continental Shelf, personnel, facilities and equipment of the Northeast Fisheries Center will be made available so that sampling programs and physiological analyses can be conducted in timely fashion at regular intervals to monitor the immediate effects of oil contamination.

The projects described in the following section will be carried out in addition to the ongoing long-term population monitoring and physiological studies of NEFC. Results of these projects will be compared against the long-term baseline data collected by the Center over the past fifteen years and an evaluation of the impact of acute oil spills on the marine ecosystem will be made.

1. Project Title

Ichthyoplankton Survey - MARMAP Survey I

2. Project Description

Standard ichthyoplankton and neuston samples are taken during all Bottom Trawl Surveys - MARMAP II (Figure 2). The description of sampling methods and techniques is found in Appendix I - MARMAP I Survey. In addition to the three survey periods, special plankton cruises are bimonthly, often in cooperation with the USSR, Poland, FRG, GDR, and Canada. Ichthyoplankton and zooplankton are monitored for temporal and spatial variations in species abundance and succession. In the event of an oil spill particular attention will be focused on the impact of the oil to the food web and overall productivity of the marine ecosystem including larval fish and their zooplankton food.

3. Performing Organization

NMFS, NEFC Marine Ecosystem Division

4. Applicable Habitats

Continental Shelf waters including Georges Bank, Gulf of Maine, and the Mid-Atlantic Bight.

5. Applicable Conditions

Studies should be limited to major oil spills.

6. Applicable Oil Type

All types of spilled oil should be studied.

7. Time Frame

Sampling will be initiated as soon after an oil spill as possible. Additional monthly or bimonthly sampling would be conducted to ensure an adequate time series of samples.

8. Cost

Sorting, volumizing and identifying major taxa $200/sample @3 samples/station (neuston, 0.505 ichthyoplankton, 0.333 zooplankton) $600/station.

Assuming a minimum of 10 stations in the vicinity of a spill (30 samples) for each of 3 months (30 X 3 = 90 samples)	$54K
Analyzing data, preparing reports	5K
Total	$59K

Hydrocarbon analyses of zooplankton samples is an additional $1400/sample - see Hydrocarbon Analyses project.

9. Equipment Needs/Equipment Available

Standard MARMAP I sampling equipment

10. Facility Needs/Facilities Available

NMFS, NEFC, Polish Sorting Center, Szczecin, Poland

11. Personnel Needs/Personnel Available

NMFS, NEFC, Polish Sorting Center, Szczecin, Poland

12. Support Services

Several Investigations within the Marine Ecosystem Division are involved with collecting and analyzing ichthyoplankton data. In addition the Ichthyoplankton Survey "piggybacks" on all groundfish survey cruises.

13. Payoffs

The MARMAP ichthyoplankton survey serves as a baseline against which we will measure changes in species abundance, composition and succession that might be caused by a major oil spill.

14. Limitations

1. Project Title

Bottom Trawl Survey Operations - MARMAP Survey II

2. Project Description

Investigate variations in the abundance and species composition in the oil spill area. Compare variations in stock abundance with the same area for other seasons and other years. Conduct Survey Operations at least three times a year and initiate special cruises at the time of the spill and monthly or bimonthly thereafter in order to provide an adequate time series of samples. Collect fish and invertebrates for genetics, physiology, biochemistry, and pathology investigations listed in the following fishery projects.

3. Performing Organizations

NMFS-NEFC Bottom Trawl Survey Operations NEC-004. Woods Hole, Mass.

4. Applicable Habitats

Continental Shelf waters including the Gulf of Maine, Georges Bank, and the Mid-Atlantic Bight. Figure 2 illustrates the Survey Operations coverage three times a year.

5. Applicable Conditions

Any major oil spill.

6. Applicable Oil Type

All types of oil should be studied.

7. Time Frame

Sampling will be initiated as soon after an oil spill as possible. Thereafter a minimum of three surveys a year would be made of groundfish in the oil spill area. Special monthly or bimonthly cruises would be initiated to augment spatial and temporal sampling in the vicinity of the oil spill.

8. Cost

NEFC annual support for Survey operations is $462.8K. Additional funds would be required in the event of an oil spill. Three special cruises at $5K/day for:

10 days would be	$150K
Data analyses	50K
Total	$200K

9. Equipment Needs/Equipment Available

See MARMAP II Survey Operations and Appendix II

10. Facility Needs/Facilities Available

NMFS, NEFC

11. Personnel Needs/Personnel Available

NMFS, NEFC

12. Support Services

Each fall, spring, and summer the Resource Surveys Investigation surveys with bottom trawls the fisheries resources of the Continental shelf from Nova Scotia to North Carolina (Figure 2). These surveys are part of the marine Monitoring, Assessment, and Prediction (MARMAP) Program's Survey II effort to document the relative abundance and distribution of these resources in the area. Supplementary surveys of the area occur regularly, many as cooperative efforts with other nations that fish in the Northwest Atlantic (Figure 1). These supplementary surveys often gather information that is not gathered in the semiannual surveys such as the seasonal/areal distribution of surf clams and the tagging of fish for stock estimates and migration studies.

The standard data that are recorded on these various surveys are the length, weight, age and maturity of the fish, and the temperature and depth of the water where captured. Ichthyoplankton samples and other hydrographic data are also often collected. Such data reveal changes in the size, composition or structure of the fisheries resource.

The role of the Resource Assessment Division of which the Survey Operations is a part, is to assess the effects of harvesting on fisheries resources. To do this assessment, the Division estimates the relative and absolute abundances, spatial and temporal distributions, and harvestable numbers, sizes, and weights of finfish, shellfish, and crustaceans in the Northwest Atlantic; and determines the productivity of these renewable marine resources from an ecosystem standpoint. To accomplish these tasks, the Division analyzes both domestic and foreign data from commercial fisheries, recreational fisheries, and research surveys. Additional economic and biological studies provide data for modeling the fisheries to aid in their management for optimum sustainable yield.

13. Payoff

The NMFS has developed fisheries independent methods for monitoring changes in fisheries abundance and distribution. In addition to survey data, it uses fishermen interviews, age and growth studies, cohort analyses, as well as commercial and recreational catch data

to assess fish stocks. With this information multispecies yield models are developed. By monitoring temporal and spatial variations in fish populations over long periods of time it is possible to separate the complex influence of naturally occurring variation from variations caused by pollution such as oil.

14. Limitations

1. Project Title

Demersal Food Chain Investigations

2. Project Description

During Survey Operations stomachs will be excised from key predator species. Stomachs will be labeled with date, station, cruise, species, length, sex, and maturity, and preserved in 10% formalin. Laboratory examination of the stomach contents will reveal volume of food, species composition of prey items, presence or absence of oil. If oil is present the sample will be designated for hydrocarbon analysis.

3. Performing Organization

NMFS-NEFC Benthic Dynamics and Demersal Food Chain Studies NEC-016. Woods Hole, Mass.

4. Habitats Applicable

Continental Shelf waters including Georges Bank, Gulf of Maine and the Mid-Atlantic Bight.

5. Conditions Applicable

Studies should be limited to major oil spills.

6. Applicable Oil Types

All types of oil spills should be studied.

7. Time Frame

Sampling should be initiated as soon after an oil spill as possible. Additional special sampling should continue on a monthly or bimonthly basis until no oil attributable to the spill is detected in the stomach/food chain.

8. Cost

Annual NEFC support is $176.1K. Special sampling in the event of an oil spill would cost $4.9K per 10-day sampling cruise, assuming three such cruises, the additional cost would be $14.6K plus $2K for data processing.

9. Equipment Needs, Equipment Available

Equipment needed for sampling stomachs is scissors, labels, gauze, jars, formalin, ties. These are provided by the Food Chain Investigations projects. Additional equipment necessary for stomach analyses is available within the project.

10. Facility Needs/Facilities Available

NMFS, NEFC

11. Personnel Needs/Personnel Available

NMFS, NEFC

12. Support Services

The Survey Operations project collects the samples routinely and would collect additional special samples in the event of an oil spill. If oil is detected in the stomach, the sample would be contracted to NMFS Analytical Laboratory, Seattle, Washington; the Univ. of Rhode Island, Kingston, RI, or some other organization for a detailed hydrocarbon analysis.

13. Payoff

The Demersal Food Chain Investigation is continuing a systematic examination of stomachs, to date over 30,000 have been examined. This provides a baseline of what is expected to be present in a demersal food web. After an oil spill this investigation can provide reports on the potential impact on fish stocks in terms of hydrocarbons in the benthis food web.

14. Limitations

1. Project Title

Physiological and Biochemical Effects of an Oil Spill on Selected Fish and Shellfish

2. Project Description

Selected tissues and blood samples will be taken and analyzed for biochemical shifts in activity and ion balance. Oxygen consumption rates will be determined. Initial studies will be conducted for two purposes: (1) selection of those animals and tissues that can be successfully prepared, packaged and stored frozen for transport to a shore laboratory without significant change in physiological character or biochemical activity, and (2) exploratory biochemistry to discover metabolic "yardsticks" that are both analytically feasible and environmentally significant. Sampling protocol is listed in Appendix IV.

3. Performing Organizations

NMFS, NEFC Physiological Effects of Pollutant Stress NEC-037. Milford, Conn.

4. Applicable Habitats

Continental Shelf waters including Georges Bank, Gulf of Maine, and the Mid-Atlantic Bight.

5. Applicable Conditions

Studies should be limited to major oil spills.

6. Applicable Oil Type

All types of oil spills should be studied.

7. Time Frame

Sampling will be initiated as soon after an oil spill as possible. Additional monthly or bimonthly sampling would be conducted until results indicate a return to "baseline" or control conditions.

8. Cost

NEFC annual support is $261K. In order to study the effects of an oil spill these funds will need to be augmented by an additional $20K, the cost of analyzing samples collected on three 10-day cruises.

9. Equipment Needs/Equipment Available

Equipment for collection of samples is found on all NMFS vessels. Laboratory equipment, chemicals, glassware is available at the NOAA-NMFS Milford, Conn. Laboratory.

10. Facility Needs/Facilities Available

NMFS, NEFC

11. Personnel Needs/Personnel Available

NMFS, NEFC

12. Support Services

Notification would be required so that special instructions or personnel could be available for oil spill sampling cruises and standard survey cruises.

13. Payoff

The purpose of this project is to monitor the physiological condition of key populations and to determine rates of recovery to more normal conditions following an oil spill. It will establish metabolic norms for indicator animals and will select key parameters for detecting stress in these animals thus providing a model for monitoring the health of our living marine resources.

14. Limitations

1. Project Title

Histopathologic Effects of an Oil Spill on Marine Organisms

2. Project Description

Morphologic study of cells and tissues from oil exposed and control animals will be studied via the light and electron microscopes. Histochemical methods will also be utilized to determine any chemical changes which may be taking place in the cells and tissues. Utilization of these tools should give us some indication as to whether or not any tissue changes are taking place in the exposed animals. Comparison of cells and tissues of the control animals using the same methods and baseline data will give us some indication as to whether or not these changes are due to the oil.

The methods and techniques employed are the same as those used by animal (experimental), and human pathologists during the past 50-100 years.

3. Performing Organizations

NMFS, NEFC Disease and Environmental Stress, Life Studies Comparative Pathobiology NEC-038, 039. Oxford, Md.

4. Applicable Habitats

Continental Shelf waters including the Gulf of Maine, Georges Bank and the Mid-Atlantic Bight.

5. Applicable Conditions

Studies should be limited to major oil spills which have impacted large populations and organisms which can be identified by location.

6. Applicable Oil Type

All types of oil spills should be studied.

7. Time Frame

Sampling will be initiated as soon as possible after an oil spill and continued at regular intervals until no further effect which could be attributable to oil is detected.

8. Cost

Slide preparation and histopathologic analysis of the slide runs anywhere from $12.00 to $15.00/slide. It will cost $12K per species for a 2-year study, $5K/species for a 6-month study.

Travel and preparation of reports - $50K.

9. Equipment Needs/Equipment Available

A field model kit containing fixatives, alcohol for storage of specimens, bags, shucking knives, etc. has been constructed by the Histopathology Unit of ERL-N. Some improvements will be made and it is hoped that these kits will then be made available for histopathologists who respond to oil spills.

A manual for the preparation of aquatic animals for histopathologic examination has been prepared by the Histopathology Unit of ERL-N and will be distributed throughout the country to interested people.

A histopathologic technique manual prepared by the Pathology Branch of the NMFS, NEFC Laboratory, Oxford, Md., will soon be available to interested people.

Necessary equipment for the preparation and analysis of microscopic slides is available at NMFS, NEFC.

10. Facility Needs/Facilities Available

NMFS, NEFC

11. Personnel Needs/Personnel Available

NMFS, NEFC and contractors

12. Support Services

In order for this project to function properly the histopathologist should be informed as to the possible oil spill impact, etc. by the on-scene coordinator. Also close coordination should be maintained with the analytical chemists who will be doing hydrocarbon determinations of the animals. In fact, when specimens are collected, they should be collected from the same time, area, species, etc. as those collected for the analytical chemists.

13. Payoff

Very little is known about the histopathologic effects of oil on marine populations. Long-term observations of animals exposed to oil would provide information about effects and recovery rates. Studies must be correlated with laboratory toxicity experiments in order to evaluate the impact of oil on marine populations.

14. Limitations

Histopathology would be of use only on animals which have come into contact with the oil in some form or manner. Results of field studies can be evaluated only if there are also controlled laboratory studies to provide baseline information.

1. Project Title

Hydrocarbon Analyses of Fish, Shellfish, Zooplankton

2. Project Description

Selected tissue samples of fish, stomachs suspected of containing oil, and zooplankton samples from selected stations will be analyzed for petroleum hydrocarbons. Samples will be collected by survey cruises and other special cruises. A time-series of samples will be established starting with those collected immediately after the cruise and thereafter at regular intervals for a year or until no hydrocarbons attributable to a particular spill are detected.

3. Performing Organization

NMFS, NEFC will be responsible for collecting the samples on Survey and special cruises. Samples designated for hydrocarbon analyses will be contracted to NMFS National Analytical Laboratory, Seattle, Washington; University of Rhode Island, Kingston, R. I.; or some other institution.

4. Applicable Habitats

Continental Shelf waters including Gulf of Maine, Georges Bank and the Mid-Atlantic Bight.

5. Applicable Conditions

Any major oil spill.

6. Applicable Oil Type

All types of oil should be studied.

7. Time Frame

Samples will be collected immediately following an oil spill and thereafter monthly until analyses indicate no detectable amount of the spilled oil in tissues or food chain components.

8. Cost

The cost of tissue analysis is $700 (NMFS, Seattle, Washington) and the cost of analyzing plankton is $1400.

Assuming 20 tissue samples/month for
the first three months: 14,000 x 3 = $42K

Plankton 4 samples/month for
the first three months: 5,600 x 3 = $16.8K

Total $58.8K

9. Equipment Needs/Equipment Available

Necessary equipment for collection and storage of samples is available on Survey and special cruises. Equipment necessary for analyses would be the responsibility of the contractor.

10. Facility Needs/Facilities Available

NMFS, NEFC; NMFS National Analytical Laboratory, Seattle, Washington or other

11. Personnel Needs/Personnel Available

NMFS, NEFC; NMFS National Analytical Laboratory, Seattle, Washington, or other

12. Support Services

In order for this project to function properly, one individual must act as coordinator to select fish and shellfish samples for analyses as well as plankton samples. Food chain investigation people must also be informed of the procedure to follow if oil is found in the stomach of any fish. The coordinator should maintain good communications with the analytical chemists doing the hydrocarbon analyses.

13. Payoff

The results of these studies will indicate the fate of petroleum hydrocarbon in the food chain. It will also give results concerning the possible tainting of marine resources which would affect their use for human consumption. The time series will also provide information on the persistence of oil in the environment after a major spill.

14. Limitations

1. Project Title

The Genetic Effects of an Oil Spill on Developing Fish Embryos

2. Project Description

Preserved eggs from plankton and neuston tows will be sorted by species and stage. They can then be examined for genetic damage. Using the methods of Longwell (1976) the extent (%) of damage can be estimated, i.e., morbidity, moribundity, abnormal embryos, chromosome damage, for that sample. The results can be compared for samples from clean and impacted areas and for historical data.

3. Performing Organization

NMFS, NEFC Cytology, Cytogenetics, Embryology and Development of Fish Eggs. Field and Laboratory NEC-089. Milford, Conn.

4. Applicable Habitats

Continental Shelf waters including Gulf of Maine, Georges Bank and Mid-Atlantic Bight.

5. Applicable Conditions

Any major oil spill.

6. Applicable Oil Type

All types of oil should be studied.

7. Time Frame

Samples will be collected immediately following an oil spill and at regular intervals thereafter until water column analyses indicate control levels of hydrocarbons in the water.

8. Cost

NEFC support annually is $195K. In order to study the effects of an oil spill these funds will need to be augmented by an additional $16.2K, the cost of analyzing samples collected on three 10-day cruises.

9. Equipment Needs/Equipment Available

Samples would be collected using standard MARMAP I Survey equipment. Equipment necessary for sorting samples and analyzing them cytogenetically is available within the Cytology Investigation.

10. Facility Needs/Facilities Available

NMFS, NEFC

11. Personnel Needs/Personnel Available

NMFS, NEFC

12. Support Services

The Survey Operations and Ichthyoplankton Investigations would be in charge of sampling and allocating subsamples for experimental examinations.

13. Payoff

Experimental and field studies have shown developing embryos to be particularly susceptible to genetic damage when exposed to various classes of toxic substances including oil. Samples taken in the vicinity of the *Argo Merchant* spill showed high percentages of moribundity, morbidity, abnormal development and chromosome damage. Results of such genetic studies are good indicators of environmental stress and can be used to assess the impact on the success of ichthyoplankton in the area of an oil spill.

14. Limitations

1. Project Title

Toxicity Studies: The Effects of Oil on Developing Fish Embryos and Larvae

2. Project Description

Toxicity studies can be carried out for both egg and larval stages. Laboratory produced embryos will be brought out to sea and exposed to water pumped from areas beneath the slick, at the periphery of the slick and in "clean" areas. Water samples will be collected and analyzed for petroleum hydrocarbons. Samples will also be collected for dissolved oxygen and salinity determinations. Embryos will be exposed at different stages of development, and subsamples will be preserved at regular intervals for later genetic studies. Observations of the developing embryos will be made including heartbeat, sinking (due to osmoregulation difficulties) respiration, yolk utilization. Similar studies will be conducted under laboratory conditions using known concentrations of fuel oil types (e.g., crude, nos. 6, 4, 2) and the water soluble fractions.

The same procedures, both field and laboratory (excepting genetics studies) can be carried out for larvae. When larvae are used, feeding initiation, feeding, swimming behavior, respiration, RNA/DNA ratios, protein synthesis, growth and yolk utilization can be used to determine the effects of hydrocarbons on the larvae. In addition, histopathological studies can be carried out on preserved specimens.

3. Performing Organization

NMFS, NEFC Physiology: North Atlantic Larval Fish NEC-012. Narragansett, R. I.

4. Applicable Habitats

Continental Shelf waters including the Gulf of Maine, Georges Bank, and the Mid-Atlantic Bight.

5. Applicable Conditions

Studies should be limited to major oil spills.

6. Applicable Oil Type

All types of oil should be studied.

7. Time Frame

Field studies should be initiated as soon after an oil spill as possible and continued until no effect is detectable on the developing embryos and larvae. Laboratory studies can be carried out at the discretion of the investigators.

8. Cost

The annual NEFC support is $154K. In the event of an oil spill these funds would have to be augmented by an additional $16K. This assumes that the field studies can be carried out using ship time that has already been accounted for in the Survey Operations project (i.e., $5K/day).

9. Equipment Needs/Equipment Available

Equipment is available in the Physiology project.

10. Facility Needs/Facilities Available

NMFS, NEFC

11. Personnel Needs/Personnel Available

NMFS, NEFC

12. Support Services

In addition to Survey Operations and special cruises arranged in the event of a major oil spill, the Cytology (NEC-089) and Disease and Environmental Stress (NEC-039) investigations would augment physiological studies carried out by this project.

13. Payoff

Results of *in situ* and laboratory toxicity studies would provide information on the impact of oil on fish embryos and larvae. Cytogenetic and histopathology studies on the exposed organisms could give further indication on the kind of damage that occurs.

14. Limitations

These studies would be limited by the availability of laboratory spawned eggs.

1. Project Title

Phytoplankton and Other Microorganisms

2. Project Description

Changes in species composition and abundance will be determined by comparing them with baseline data already available. Health of the phytoplankton communities exposed to oil will be determined using chlorophyll-phaeophytin relationships. Successional elements will be followed. Primary productivity of impacted populations will be estimated and photosynthetically available radiation, nutrients and other hydrographic factors will be measured.

3. Performing Organization

NMFS, NEFC Biological Oceanography of Stressed Ecosystems NEC-036. Sandy Hook, N.J.

4. Applicable Habitats

Continental Shelf waters including Georges Bank, Gulf of Maine and the Mid-Atlantic Bight.

5. Applicable Conditions

Studies should be limited to major oil spills.

6. Applicable Oil Type

All types of oil spills should be studied.

7. Time Frame

Sampling will be initiated as soon after an oil spill as possible. Additional monthly or bimonthly sampling would be conducted until results indicate a return to "baseline" or control conditions.

8. Cost

NEFC annual support is $214.8K. In order to study the effects of an oil spill these funds will need to be augmented by an additional $17K, the cost of collecting and analyzing samples collected on three 10-day cruises.

9. Equipment Needs/Equipment Available

Equipment necessary to carry out this project is available at the Sandy Hook, N.J., laboratory and is part of standard equipment on all NMFS vessels.

10. Facility Needs/Facilities Available

NMFS, NEFC

11. Personnel Needs/Personnel Available

NMFS, NEFC

12. Support Services

Sampling would be carried out during Survey Cruises. All samples would be analyzed by the Investigation.

13. Payoff

Because the lower trophic levels produce and consume 90-95% of the biological energy which passes through the marine ecosystem and because they are the base of the marine food web all other marine organisms except certain bacteria are dependent upon them. They have short generation times (0.5-10 days) and rapid growth rates and consequently are sensitive and responsive to alterations in the marine ecosystem. As such they are good indicators of environmental stress.

14. Limitations

1. Project Title

Fishery Oceanography: Environmental Studies

2. Project Description

Hydrographic and nutrient Investigations will be carried out in the area of an oil spill. Temperature, salinity, and dissolved oxygen structure of the area will be determined. Current meters will be deployed to determine surface and bottom circulation in the area of the spill.

3. Performing Organization

NMFS, NEFC Fishery Oceanography: Environmental Studies NEC-008. Woods Hole, Mass.

4. Applicable Habitats

Continental Shelf waters including Gulf of Maine, Georges Bank and Mid-Atlantic Bight.

5. Applicable Conditions

Any major oil spill.

6. Applicable Oil Type

All types of oil should be studied.

7. Time Frame

Studies should be initiated as soon after an oil spill as possible. Additional sampling will continue on a monthly basis for at least three months.

8. Cost

Annual NEFC support is $467K. The cost of augmenting these studies in the event of an oil spill assuming three 10-day cruises would be $39K.

9. Equipment Needs/Equipment Available

Most of the equipment needed for sampling is available on NMFS vessels or within the Investigation.

10. Facility Needs/Facilities Available

NMFS, NEFC

11. Personnel Needs/Personnel Available

NMFS, NEFC

12. Support Services

Fishery Oceanography sampling operations can be carried out on Survey Cruises. Additional information will be obtained from the National Weather Service (NWS).

13. Payoff

Knowledge of temperature, salinity, dissolved oxygen regime in the area of a spill as well as the surface and bottom currents based both on baseline data from previous years and from the time of a spill allows estimates of risk analyses. Predictions of impacts on fish stocks and the anticipated movement of the surface oil can be made.

with what confidence ??

14. Limitations

BUDGET

Fund Augmentation Needed by the NEFC in the Event of a Major Oil Spill*

Bottom Trawl Survey	200K
Demersal Food Chain Studies	16.6
Physiological-biochemical Effects	20
Histopathology (4 species--2 years)	48
Report	50
Hydrocarbon Analyses	58.8
Physiology-larvae	16**
Ichthyoplankton	59
Genetics	16.2
Fishery Oceanography	39
Biological Oceanography	17
Total	540.6K

*Assuming all sampling is completed on three 10-day cruises or already scheduled cruises.

**Estimate made assuming ship time on a scheduled special cruise; if ship time is scheduled the additional cost would be 5K/day.

SUMMARY

The projects proposed are those which would be conducted by NEFC in the event of a major oil spill in Continental Shelf waters from Nova Scotia to Cape Hatteras. They would be carried out within the background of MARMAP Survey I and II baseline data collected in the Northwest Atlantic over the last 15 years. Standard methods of collecting would be employed according to standardized operations of Survey I and II (Appendices I and II). At each collection site hydrographic conditions would be monitored also.

The Ocean Pulse program data provides a baseline of physiological measurements against which impact on the health of fish stocks can be monitored. The projects proposed within the NEFC Fisheries Plan are those which would be carried out in direct response to a major oil spill. However, in order to assess the impact of an oil spill on renewable marine resources, long-term experimental and monitoring studies must be conducted to determine what the chronic effect of hydrocarbons on the marine ecosystem are. Therefore, in addition to in situ sampling and monitoring several projects are recommended which are long-term and experimental:

1. Behavior of fishes under environmental stress (NEC-033) NMFS, NEFC, Sandy Hook, NJ.

2. Physiology of North Atlantic larval fish (toxicity studies, in situ and laboratory, selected species) (NEC-012) NMFS, NEFC, Narragansett, RI.

3. Physiological Effects of Pollutant Stress (toxicity studies, biochemical or physiological effects on adult fish and larval and adult invertebrates).

4. Disease and Environmental Stress (toxicity studies, histopathology, larval and adult fish and invertebrates) (NEC-038, 039) NMFS, NEFC, Oxford, MD.

APPENDIX I. MARMAP SURVEY I OPERATIONS

A high degree of uniformity and standardization in Survey I Operations is essential to achieve MARMAP objectives. It is recognized, however, that some latitude in details of technique or procedure is desirable or even necessary because of regional variations in ecosystem parameters such as biota distribution, abundance, diversity, and environment. This document specifies procedures to be followed in the at-sea collection and laboratory analysis of Survey I data. Its provisions will be met by all activities and organizational elements of the National Marine Fisheries Service (NMFS), and other organizations participating in MARMAP Survey I under sponsorship of NMFS. It also describes the techniques for collecting concurrent environmental data, and for the quality controlling of all data. It should be understood that not all of these operations may be conducted on every cruise and that additional MARMAP Operations (Survey II, and/or Fishery Oceanography) may be carried out.

The MARMAP Station

A MARMAP Station is defined as a location in the ocean where data are collected. It has, for all routine operations, one position but may involve a number of activities. Stations are numbered consecutively beginning with the first station of a cruise. Following precedents set at a number of NMFS laboratories, bathythermograph (BT) lowerings will be numbered separately; and between-station BTs will not be assigned station numbers.

The MARMAP Master Station Record (MSR) is the only log sheet which lists the station position. This is done deliberately to prevent the proliferation of divergent data. Following each cruise the MSRs will be used to produce an accepted list of station positions for the voyage. This list will be made promptly available to all who are to be involved with the analyses of the cruise data.

Zooplankton - The Bongo Sampler

The standard sampling gear for all MARMAP Ichthyoplankton (Survey I) Operations is the Bongo net (Posgay and Marak, In Press) (Figure I-1). It consists of two cylindrical mouth pieces, 61 cm in diameter, (the towing wire passes between the cylinders and is therefore not in the sampling path) inside of which are fastened flowmeters. To obtain flowmeter readings representative of the entire mouth the meter must not be closer to the wall than 6 times the wall thickness. The nets are of a cylinder-cone configuration, 3.6 m long. The mesh aperture of one net is 0.333 mm and of the other net 0.505 mm, and the ratios of their mouth areas to total netting aperture areas are 1:7.3 and 1:7.9, respectively. Cod ends are routinely folded and tied off in the manner of a fishing net cod end. However, cod end beakers or socks may be used if desired.

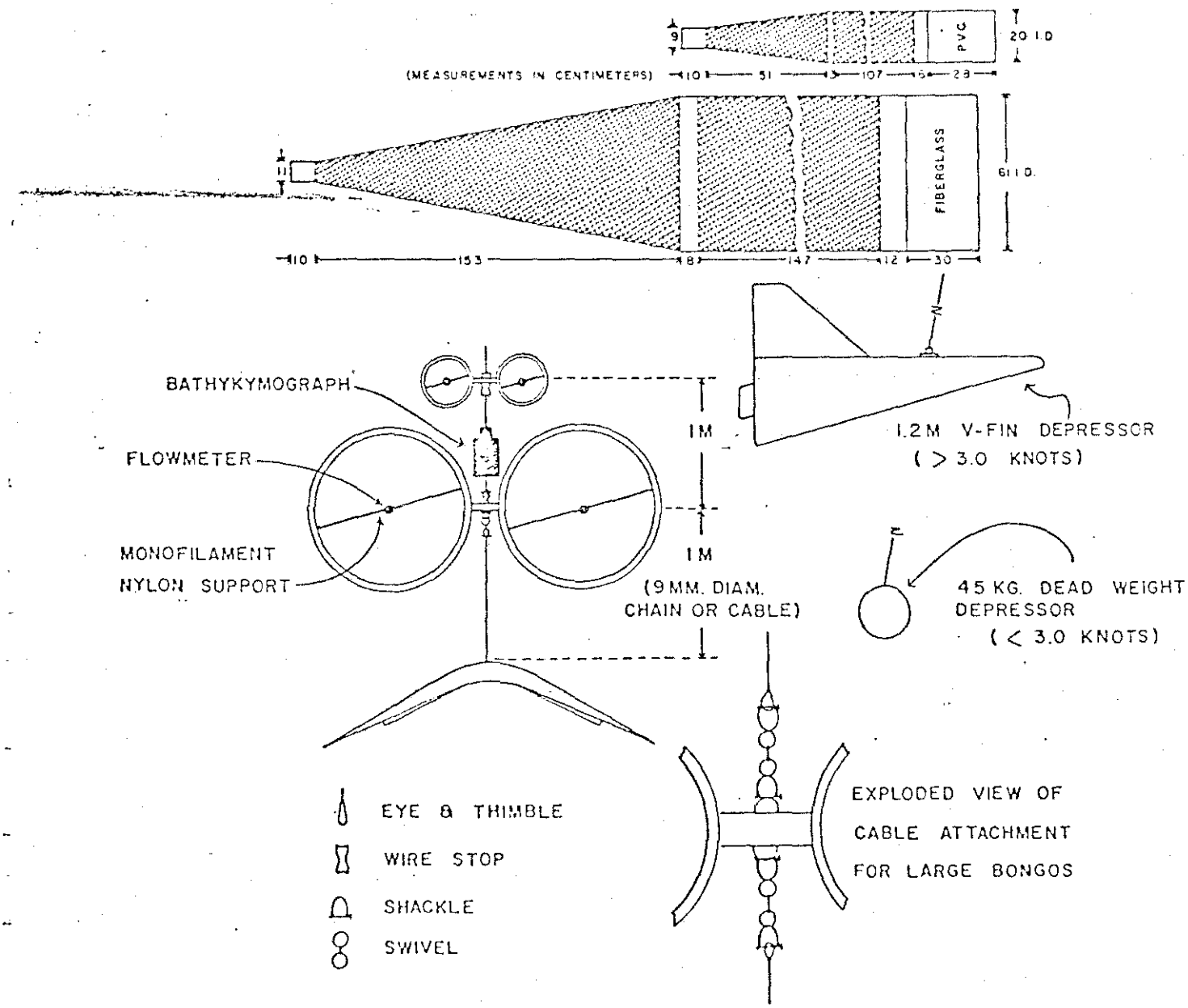

Figure I-1. Arrangement of MARMAP Bonco Samplers on Tow Wire.
(From Posgay and Marak, In Press)

A depressing force is necessary to achieve desired results. At towing speeds of 1.5-2.0 knots a 45-kg dead weight depressor is sufficient. At speeds higher than 3 knots a 1.2-m V-fin depressor is necessary. Towing wire must be at least 6.4 mm (1/4 inch) diameter and of 300 m length plus that necessary for all rigging and a safe mount on the winch. Although tension during towing is about 250 kgm it can reach as high as 1,000 kg under dynamic loads. A Bendix Model T-1, or equivalent, time-depth recorder (to record tow profile) must be attached to the towing wire just above the attachment of the net. Each instrument must be calibrated at the beginning and end of its use.

For special studies the 20 cm mouth diameter Bongo sampler may be used in addition, or in place of, the 61-cm Bongos. If the 20-cm Bongo is to be substituted for the 61-cm Bongo during regular Survey I cruises, prior approval must be obtained from the MARMAP Program Office (MPO).

The standard tow for all MARMAP Ichthyoplankton (Survey I) Operations is the double oblique. This is a tow during which the sampler describes an oblique path and fishes during both descent and ascent. There should not be time spent at depth (horizontal sampling), and all depth strata should be sampled equally (i.e., the paths of descent and ascent should be straight lines).

The desired depth of the tow is to within 5 m of the bottom or to a maximum of 200 m. Figure I-2 shows the amount of wire out to achieve desired depths. Routine checks of time-depth records must be made and wire-outs to desired depth ratios adjusted accordingly.

Towing speed is between 1.5 and 2 knots. Higher speeds introduce variables, particularly extrusion, and make inclusion of the data with those from standard tows difficult. For those vessels without adequate speed control a valid tow may be achieved by monitoring wire angles during retrieval.

At the beginning of each tow both flowmeter readings are recorded ("Flow-meter start") to the nearest whole revolution. Care must be taken to prevent this reading from changing prior to the commencement of fishing, e.g., "windmilling."

NOTE: Flowmeters are calibrated at the beginning and end of each cruise. Calibration can be done at sea by towing the flowmeters, attached to a suitable frame, in two directions over a known distance. At least 2 tows in each direction at several towing speeds between 1.5 and 2.0 knots must be made. A calibration factor is calculated for the length of a column of water needed to affect one revolution of the meter (meters per revolution) at each towing speed. The units of the factor (meters per revolution) were chosen so that the factor would be applicable to nets of different mouth area for obtaining volume of water filtered: (Meter Revolutions)(Calibration Factor)(Mouth Area) = Volume Filtered.

When the ship is on course and steaming at 1.5-2.0 knots the Bongo array is launched. Start time for the tow is the time the flowmeter begins

LEGEND

Symbol	Vessel	Cruise	Regression Equation
------	Albatross IV	72-06 (OTP I)	Y = -17.4 + 0.787(X)
.....	Oregon II	72-39 (OTP I)	Y = 10.8 + 0.706(X)
-.-.-.	Delaware II	72-19 (OTP I)	Y = - 4.77 + 0.782(X)
———	Total	MARMAP OTP I	Y = - 3.7 + 0.756(X)

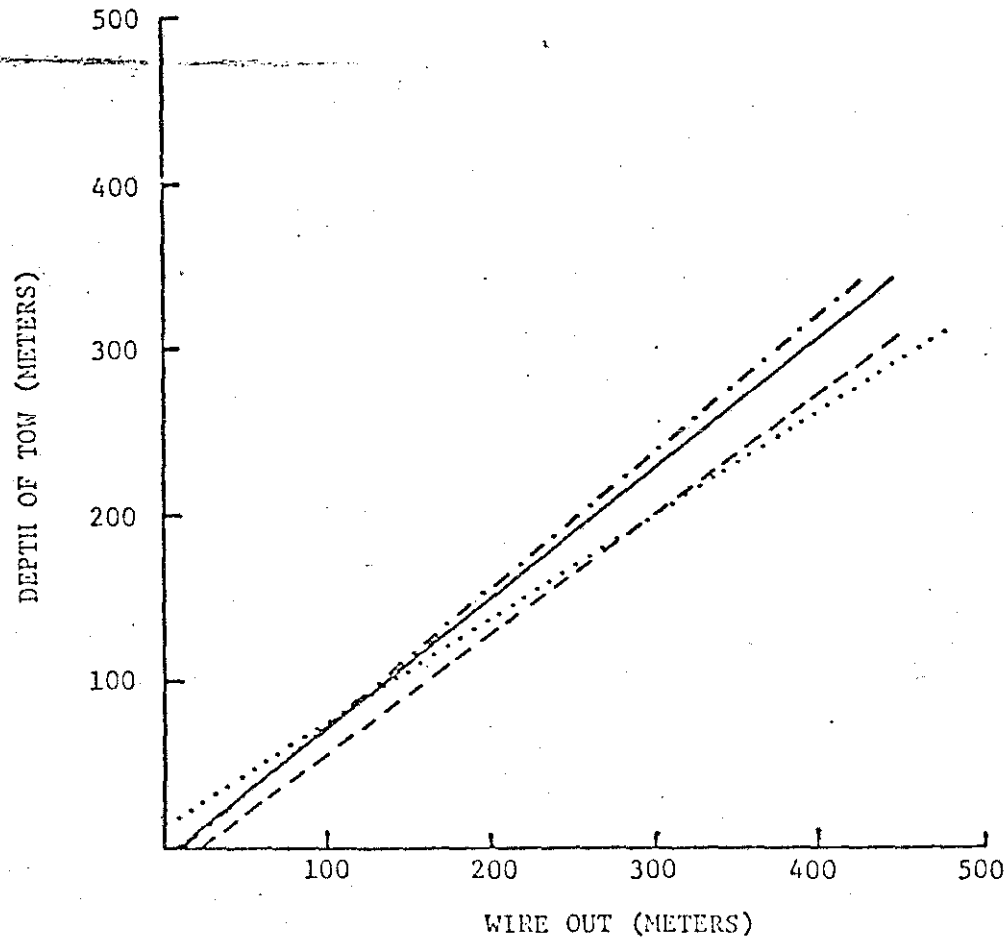

Figure I-2 Amounts of wire out to achieve desired depths for the MARMAP 61 cm bongo net.

These regressions imply a linear relationship between wire out and desired depth. In fact, the relationship is not linear over the entire depth range. Nevertheless, the curves are presented as an initial aid to workers attempting bongo tows, wire out will no doubt have to be adjusted based on the results of tows during any cruise. The curvilinear relation is under investigation and will be supplied as an amendment to this manual.

turning (note any "windmilling"). The towing wire is payed-out at a rate of 50 m/min. As soon as the necessary length is reached retrieval begins. Retrieval rate is 20 m/min. The ship should maintain a speed that keeps the tow wire closed to an angle of 47°. Wire angle is measured by an inclinometer which can be of the telemetering or non-telemetering type. If a telemetering inclinometer is used, the angle of stray can be controlled from the bridge. When a non-telemetering device is used an officer of the watch or the recorder observes the wire angles during the tow and signals the bridge if the desired angle is not being maintained. In both cases an observer on deck records wire angles for each 10 meters of wire during retrieval. Both the "time going out" and the "time coming in" (to the flowmeter's exit from water) are recorded. Standard tows result in zero "time at depth." Enter zero unless difficulties are encountered.

After getting the sampler aboard examine the TDR trace to determine its acceptability. If the trace does not fall in the envelope appropriate for its depth range the tow must be repeated.

Record the readings of both flowmeters ("Flowmeter end") and note any observed or suspected reasons for values to be in question (excess windmilling, damage, fouling of meter or apparent clogging of meshes of the net).

The nets are held off the deck by hand or by tackle and their contents are rinsed to their cod ends by a gentle spray of salt water directed from their outsides. The samples are then quantitatively transferred to appropriately labeled (for the 0.333 mm and 0.505 mm mesh apertures) buckets unless a cod end sock or beaker is used.

NOTE: The buckets often contain a great deal more water than is desirable to preserve. This may be eliminated by the use of a draining pan with meshes smaller than those of the collecting net. Also, on some occasions the sample may contain large quantities of jelly fish, salps, etc. They may be too large to fit into the sample jars provided. On such occasions separate these organisms, rinse any small, adhering organisms into the bucket containing the sample, log the large organism's description and estimated volume and discard them.

Quantitatively transfer the sample from the bucket to the draining pan. After the water has drained off, transfer the sample to a one quart sample jar(s) using a minimum of sea water from a rinse bottle directed at the back side (the mesh) of the pan. Use extra jars when necessary so that no jar is more than 1/2 full of suspended plankton or 1/4 full of drained organisms. Add sea water to about 3/4 full before introducing the preservative, to avoid "burning" the delicate specimens.

Add 50 ml of buffered concentrated formalin to each quart sample and top off with sea water.

NOTE: Preservative used for filling the original sample jars and in any subsequent sample container is 3-5% buffered formalin. (Formalin is a saturated aqueous solution of formaldehyde gas, about forty percent formaldehyde by weight.) The preferred buffer is marble chips. These are added to the formalin supply container, not the sample container, in a quantity to produce an excessive base. This results in sample containers receiving a preservative which is basic but which will not remain so indefinitely. Investigators working on samples containing delicate calcereous specimens may wish to alter the preservative they use.

Fill out and apply outside and inside jar labels which are preprinted and color coded for the gear and mesh used. Inside labels are written with waterproof ink (Higgins Engrossing Ink, No. 892, which does not clog the pen--Kohinoor Rapidograph No. 0 or 00--or equivalent). Outside labels, due to their oily surface texture, are written with ball point pen.

Fill out appropriate parts of the MSR and MARMAP Zooplankton Sample Logs (ZSL and ZSL-ADP).

Zooplankton - The Neuston Sampler

For neuston, near surface zooplankton, and contaminants such as tar and plastics the standard gear is the MARMAP neuston net (Figure I-3). It consists of a rectangular mouth constructed of 3.2 cm (1 1/4") ID standard wall aluminum pipe with opening dimensions of 0.5 m high by 1 m wide. The net is of conical configuration, 4.9 m long. The mesh aperture is 0.505 mm, and the ratio of mouth area to total netting aperture area is 1:7.8. Presently the cod end is being folded and tied-off similar to the Bongo net cod ends. A cod end sock or beaker may be used if desired. A simple bridle, most of which is out of the water during fishing, precedes the net mouth. Towing wire must be at least 0.6 cm (1/4") diameter steel and of 40 m length plus that necessary for all rigging and a safe amount on the winch. Wire or 1.3 cm (1/2") diameter nylon line may also be used on a warping capstan if a regular winch setup is not available. Tension during towing is about 250 kg but may reach 1,000 kg during dynamic loads.

The standard MARMAP tow is made with the net 1/2 submerged, and with a vessel speed of 2.0 knots for a duration of 10 minutes. In subtropical and tropical areas or for studies of species of relatively low abundance tows of longer duration may be made.

The vessel should be executing a slow turn in the same direction as the side of the ship from which the tow is being made. Tows made in the wake of the vessel are unsatisfactory. Also, any sanitary discharges which may contaminate the sample must be secured during the tow.

The start time for a neuston tow is taken when the net begins fishing 1/2 submerged. The end time is taken when the net exits the water.

The sample is quantitatively transferred from the net to a sample jar(s) in a manner similar to the Bongo samples.

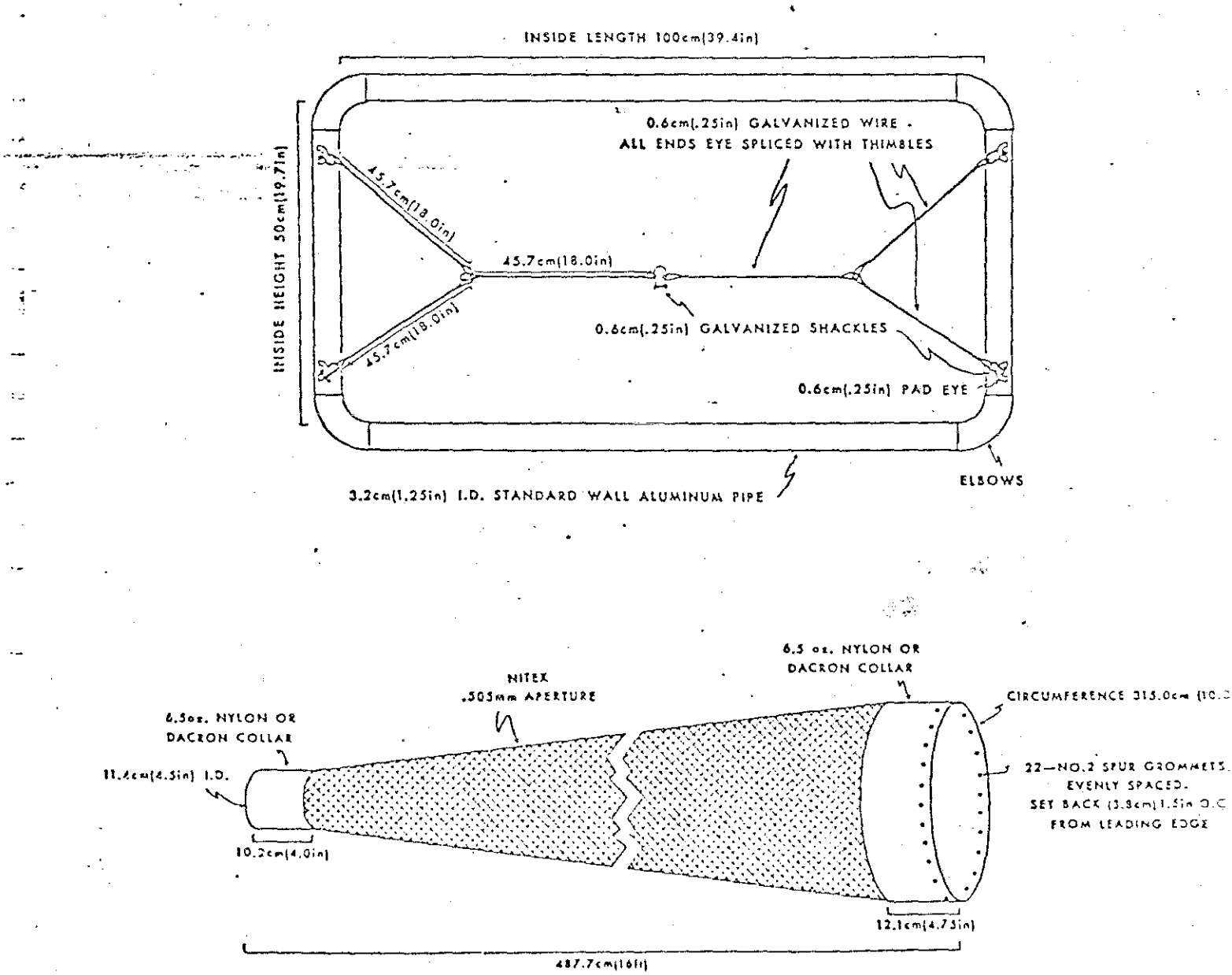

Figure I-3. The MARMAP Neuston Sampler.

NOTE: Tar balls may be encountered. If possible preserve them with the rest of the sample. If, however, the tar balls are too large for the sample jars, place them in plastic bags with an inside "Biological Sample Label" and place the bags in a freezer.

Fill out and apply outside and inside jar labels which are preprinted and color coded for the gear and mesh used.

Fill out appropriate parts of the MSR and ZSL. No wire angle data need be recorded for neuston tows.

Processing of Ichthyoplankton

The processing is carried out in several steps: removal of all tar contaminants; measuring the volume of plankton in each sample; sorting out and enumerating all fish eggs and larvae and plastics; identifying all larvae; measuring certain larvae; identifying certain fish eggs and staging (aging) some; and curating all fish eggs and larvae.

All data are standardized and subjected to automatic data processing for final analyses and publication.

APPENDIX II. MARMAP SURVEY II OPERATIONS

Survey coverage proposed for implementation in FY 1978 and 1979 are described in this section. A map of the management areas to be surveyed is presented in Figure 2. Standard Survey II biological and environmental sampling will be performed in these areas.

Trawl Survey Sampling Design

A stratified sampling design is utilized on Survey II. The principal operational features as applied to the groundfish survey are:

A) The Continental Shelf and Slope to a maximum depth of 500 fathoms are subdivided into sampling strata corresponding to geographic and hydrographic subdivisions significantly related to fish distribution.

B) Locations of trawl stations are pre-selected within each stratum.

C) When diel movements are not biased, sampling is conducted on a 24-hour basis with the entire region being covered in the minimum time possible using a systematic cruise track that ignores stratum boundaries and tends to minimize steaming time.

NOTE: The maximum depth limits for Survey II Operations vary according to management areas and the types of demersal resources being investigated.

Selection of Stations

The selection of the cruise stations in each sampling stratum is made in conjunction with the preparation of the cruise plan. The precise location of each station is also plotted on the navigational charts to be used at sea. The number of stations is proportional to the area of the stratum, with a minimum of two stations in a stratum. The average for the New England Groundfish Survey Operations, for example, is about 4 1/2 stations per stratum. The range is from 2-10 stations, depending upon stratum size and priority.

Random selection of stations in very narrow, deep strata along the edge of the shelf is actually a two-stage process both ashore and at sea. That is, a station is first located with respect to latitude and longitude and then a specific trawling depth is selected. The second step is necessary because the design specifies that trawling be done along depth contours, and navigation alone is not sufficiently accurate to pinpoint a depth contour along a steep edge. As an example, for a stratum in the 100-200 fathom zone, one of the depth intervals (101-125, 126-150, 151-175, 176-200 fathoms) is randomly selected for each station in the stratum. Selections

are without replacement since no more than 3 stations are allocated to such narrow strata. The selected trawling depth interval is recorded beside the station on the navigation chart for convenient reference at sea.

Acquisition of Vessel Services

NOAA vessels shall be acquired for Survey II Operations in accordance with current version of the NOAA Fleet Operational Plan. Services of non-NOAA vessels on a contract basis shall be acquired by the MPO through regular contracting procedures. The Program Manager or his designee shall ascertain the compliance of candidate vessels with MARMAP Survey II requirements as described in this plan and by the MARMAP System Description.

The MPO shall maintain a current listing of vessel service requests and commitments and the pertinent ship operating schedules.

Standard Sample and Data Acquisition Procedures

Trawl samples will be processed on-board. Only secondary samples (stomachs, gonads, scales, otoliths) and unusual specimens requiring special study will be returned to shore. The minimum routine data obtained in processing trawl catches is the total weight and length frequency of each finfish species in the catch, plus scale or otolith samples for a few important commercial species (particularly haddock) (Table II-1). A few invertebrates (lobsters, shrimp, scallops, and squid) are also recorded routinely. Depending upon the specific data requests and the availability of personnel, other common kinds of samples or observations performed include:

- stomach contents
- frozen or preserved specimens
- parasites
- gonads
- meristic or morphological observations

Processing the trawl catch is accomplished by dumping it into a waist-high checker. The fish are sorted into steel baskets of one and two bushel capacity, usually according to species. The catch of each species or sample of it is weighed to the nearest whole pound on a simple balance (steelyard) having a single point of attachment. (The accuracy of this method is ±10% for 10 lbs of fish. It is only ±25% for less than about 10 lbs of fish, however. Therefore, small catches are usually weighted in a small plastic pail attached to a simple spring scale.

TABLE II-1 REQUIREMENTS FOR SURVEY 2 AT-SEA SAMPLE AND DATA ACQUISITION

Information Required	Specific Parameters Measured	Minimum No. Samples or Observations (Depths) Per Primary Station	Depth Covered	Accuracy	Precision	Range
BIOLOGICAL						
Demersal fish abundance/diversity and distribution	- No. individuals in taxonomic categories - Weight by species		Near Bottom Near Bottom			
Epibenthic invertebrates abundance/diversity and distribution	- No. individuals in taxonomic categories - Weight by species		Near Bottom Near Bottom			
Age--specific fecundity and survivorship of demersal fish populations	- Length frequency* - Scales/otoliths (collected for subsequent analysis)* - Stomach samples (collected for subsequent analysis)* - Gonad samples (collected for subsequent analysis)*		Near Bottom Near Bottom Near Bottom Near Bottom			
Distribution and abundance of surface fish schools, mammals, & birds	- Direct visual observation		N/A			
Benthic infauna abundance/diversity and distribution	- No. individuals in taxonomic categories - Weight by species		Near Bottom Near Bottom			
Special biological information	- Parasites* - Rare or unusual specimens (collected for subsequent analysis)		Near Bottom Near Bottom			
PHYSICAL OCEANOGRAPHIC						
Water Mass Characteristics **						
• Temperature-Depth	Temperature	10	0 to 200m	± 0.1°C	± 0.02°	-2 to 35°C
• Salinity-Depth	Salinity or Conductivity	10	0 to 200m	± 0.1°/oo ± 0.3 m ℓ/ℓ	± 0.02°/oo	0 to 40°/oo
Near-Bottom Water Mass Characteristics**						
	Temperature		Near Bottom	± 0.1°C		
	Salinity		Near Bottom	± 0.1°/oo ± 0.3 m ℓ/ℓ		
Upper-Ocean Circulation Dynamics						
• Current Velocity (Direct Measurement)	Current Velocity	1	200m	± 10 cm/sec	± 0.1 KT	10-100 cm/sec
• Surface Wind Vector	Wind Velocity	1	200m	± 5.0 kts	± 2°	0 to 50 KT
	Wind Direction	1	----	± 10°		0 to 360°
METEOROLOGICAL (See Reference 4)						

* Number of species sampled and number of samples acquired per species will depend upon the nature of the data base for each species existent at any point in time.

** STD is to be used if available, if not available, bottle cast are to be used.

Measuring boards (some fitted with punch strips for large numbers of fish) are used for obtaining length frequencies to the nearest whole centimeter. Fork length is used except where not applicable, and then total standard length is recorded. Carapace lengths are taken for lobsters, mantle lengths for squid, wing-width for rays, and shell lengths for scallops, carapace length for pandalid and carapace width for crabs; peneid shrimp are weighed only.

Whenever practical, the entire catch of each species is weighed and measured. When sampling is employed, the following three requirements must be met:

- A representative sample of each species must be obtained.
- The sample must be large enough for a good estimate of the total weight and length frequency of each species.
- The size of the sample (weight, volume, number) relative to the total catch must be clearly indicated.

An outline of instructions for all types of sampling should be provided to all members of the scientific party and posted on the appropriate ship's bulletin board, as a number of different biological samples are taken on every survey cruise. Some of these are routine, e.g., scale and otolith collections, but many are not routine, particularly if visiting scientists are aboard. These instructions provide details on methods of sampling; e.g., stratified sampling by length for scale and otolith collections, sample sizes and preservation methods. Tally sheets should be posted for keeping a tow-by-tow tally of the samples collected to improve the efficiency of the sampling and particularly to help ensure that all the required samples are obtained. An outline of sampling procedures applicable to the basic catch data should also be posted on a bulletin board near the area where fish processing occurs.

Trawl specifications and groundfish survey equipment list are found in Figure II-1 and Tables II-2 and II-3, respectively.

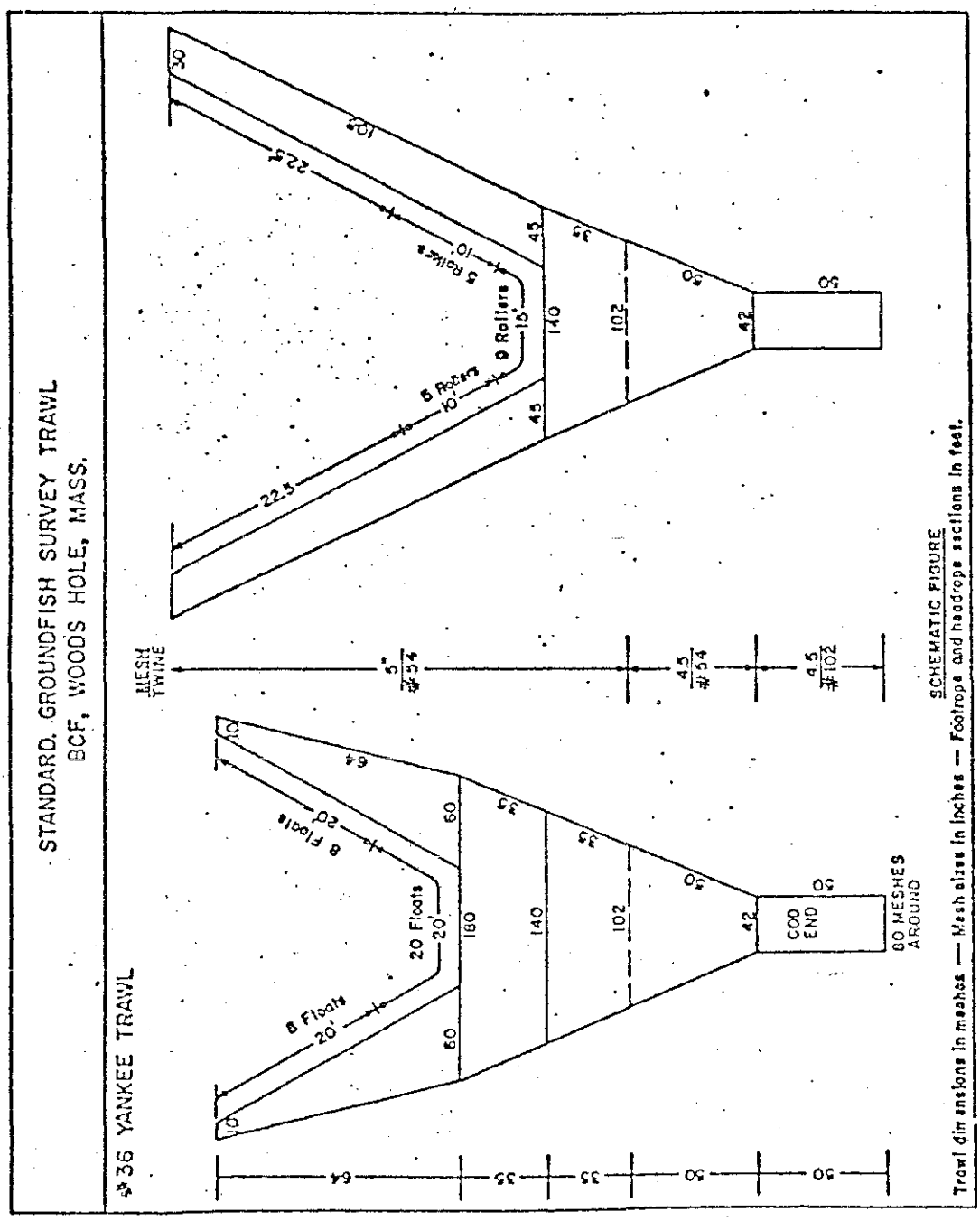

Figure II-1 Schematic drawing of standard trawl used on groundfish survey by Bureau of Commercial Fisheries, Biological Laboratory, Woods Hole, Massachusetts.

Table II-2

SPECIFICATIONS FOR THE STANDARD GROUNDFISH SURVEY TRAWL CURRENTLY IN USE BY THE NEW ENGLAND GROUNDFISH SURVEY

TRAWL PART	CONSTRUCTION DETAILS
Overall length (wing ends to cod end)	Approximately 98
Material and mesh sizes (stretched mesh, certified)	
Trawl	#54 Tan Nylon throughout. 5" mesh in wings, square and forward section of bellies; 4-1/2" mesh in aft section of bellies.
Cod end	#102 white Nylon, 4-1/2" mesh, 80 meshes around, 50 meshes long.
Liner	#147 Knotless White Nylon, 1/2" mesh, in two pieces; one piece attached 35 meshes up from aft end of top belly which lines about 60 meshes across center of top belly, and which extends about 2' into cod end; and one piece lining entire cod end and extended about 2' outside of cod end when open.
Headrope (total length)	60' in three 20' sections, 7/8" dia. comb. wire rope, eye at each end and joined by 7/8" patent (split) links.
Headrope hanging	
Square (Bosom)	14'
Wings	23'
Footrope (total length)	80' in five sections: 22-1/2', 10', 15', 10' and 22-1/2'; 3/4" dia. 6 x 25 galv. wire.
Footrope hanging	
Lower belly	10'
Wings	35'
Rollers	Hard rubber, 5" wide by 16" diameter separated by rubber spacers 6-7" wide by 5-1/2" diameter - center section of 15' with 9 rollers separated by two spacers - two 10' sections each with 5 rollers separated by three spacers.
Floats	8" diameter aluminum (spherical-no collar) deep sea type, 20 floats along center 20' sect of headrope, and 8 floats evenly spaced on each 20' side section.

Table II-3 REPRESENTATIVE GROUNDFISH SURVEY EQUIPMENT LIST

Equipment	Description/Type	Notes
Standard Survey Trawl	Specification for standard groundfish survey #36 Yankee trawl developed by NEFC at Woods Hole, Massachusetts, is contained in Appendix D.	Prior to each survey it is mandatory that the cruise coordinator and the mate in charge of trawl gear compare assembled trawls with the standard specifications. Experience indicates it is too easy for undesirable modifications to slip in as a result of temporary repairs becoming permanent, or because of a lack of proper spare net sections or other parts.
Other Nets	Bongo net adopted as standard plankton gear for Survey 1 (Specifications are available from Survey 1 Manager	
Dredge	Candidate device for sampling infauna has not been selected	
Instrumentation	Bathythermograph Echo sounders Salinity/Depth/Temperature (Measurement System) Miscellaneous instruments including: Thermometers Stop watches Counters Meter wheels	All of these instruments require maintenance, and their condition, including supplies of slides for BT's and paper for echo sounders, should be checked before each cruise.
Paper Supplies	Field logs Data sheets Envelopes and labels Cardboard boxes	
Miscellaneous Hardware	Assorted jars, and vials plastic and cloth bags and cheesecloth for preserving samples Measuring boards and punch strips. Spring scales and steel yards with weights. Steel baskets and plastic buckets and garbage pails. Knives, forceps and other dissecting instruments	
Chemicals	Formalin Glycerine Alcohol	
Reference Books		Identification of fishes is facilitated by references on fishes found in the area
Meterological Instrumentation	As described in Survey 1 Plan	

Appendix III

NEFC - Task Development Plans - FY 1980

By Division

TDP No.	Task No.	Task Name	Leader	Division	Location	BY + 1 Target Allowance	BY + 1 Increase
NEC-042-80-AQ-A-5	88E4P1	Aquaculture Genetics	Longwell	Aquaculture	Milford	5/261.1	
NEC-043-80-AQ-A-5	88E4P2	Aspects of Nutritional Requirements of Molluscs	Ukeles	Aquaculture	Milford	5/273.7	
NEC-045-80-AQ-A-5	88E4P4	Spawning & Rearing of Molluscs	Landers	Aquaculture	Milford	6/272.4	
NEC-089-80-EI-A-5	88C2F2	Cytology, Cytogenetics, Embryology & Development of Fish Eggs - Field & Laboratory	Longwell	Aquaculture	Milford	0/25.0	6/195.0
NEC-093-80-EI-A-5	New	Experimental Approach to Environmental Pollutants That Affect Phytoplankton Populations in the Ocean	Ukeles	Aquaculture	Milford		2/100.0
NEC-096-80-AQ-A-5	88E402	Training - Molluscan Aquaculture	Hanks, J.	Aquaculture	Milford	0/67.5	
					TOTAL	16/899.7	8/295.0
NEC-084-80-FO-A-5	78A4Y4 88A4Y4	Ocean Climatology and Monitoring	Cook/Ingham	Atlantic Environmental Group	Narragansett	5/214.2	3/102.8

Appendix III cont.

By Division

TOP No.	Task No.	Task Name	Leader	Division	Location	BY + 1 Target Allowance	BY + 1 Increase
NEC-001-80-EI-A-5	88C2F1	Coastal Monitoring Assessment and Prediction (COMAP)	Kelly	Environmental Assessment	Woods Hole	3/146.5	2/57.5
NEC-033-80-EI-A-5	88C2P1	Behavior of Fishes Under Environmental Stress	Olla	Environmental Assessment	Sandy Hook	5/110.5	3/144.4
NEC-034-80-EI-A-5	88C2P2	Coastal Ecosystems	Reid	Environmental Assessment	Sandy Hook	7/168.8	5/139.0
NEC-036-80-EI-A-5	88C2P5	Biological Oceanography of Stressed Ecosystems	Thomas	Environmental Assessment	Sandy Hook	7/214.8	6/290.2
NEC-037-80-EI-A-5	88C2P8	Physiological Effects of Pollution Stress	Calabrese	Environmental Assessment	Milford	10/261.0	6/453.5
NEC-040-80-EI-A-5	88C2Q4	Environmental Chemistry	Greig	Environmental Assessment	Milford	2/66.6	4/424.3
NEC-085-80-EI-A-5	New	Ocean Pulse Contract: At Sea & Laboratory Experimentation & Vessel Support		Environmental Assessment			0/1000.0
NEC-086-80-EI-A-5	New	Ocean Pulse Contract - Benthic Sample Processing		Environmental Assessment			0/560.0
NEC-100-80-EI-A-5	New	Environmental Statistics	Chang	Environmental Assessment	Sandy Hook	1/00.0	3/160.8
					TOTAL	35/968.2	29/3,229.7
NEC-006-80-FO-A-5	88A4G2	Ecosystem Dynamics	Grosslein	Marine Ecosystems	Woods Hole	3/122.2	1/70.3
NEC-007-80-S1-A-5	88A2F2 78A2F2	Recruitment Processes	Lough	Marine Ecosystems	Woods Hole	4/413.3	0/60.0
NEC-008-80-FO-A-5	88A4G1	Fishery Oceanography: Environmental Studies	Wright	Marine Ecosystems	Woods Hole	8/467.2	2/47.5
NEC-009-80-RF-A-5	88F9F1	Oceanic Gamefish	Casey	Marine Ecosystems	Narragansett	3/149.0	1/49.4
NEC-012-80-S1-A-5	88A2F5	Physiology: North Atlantic Larval Fish	Laurence	Marine Ecosystems	Narragansett	5/154.6	3/122.1
NEC-014-80-S1-A-5	88A2F3	Plankton Ecology	Sherman	Marine Ecosystems	Narragansett	10/531.5	1/176.6
NEC-016-80-S2-A-5	88A2F4	Benthic Dynamic & Demersal Food Chain Studies	Wigley	Marine Ecosystems	Woods Hole	5/176.1	1/76.0
NEC-031-80-S1-A-5	88A2P2	MARMAP I: Biological Assessment	Smith, W.	Marine Ecosystems	Sandy Hook	12/348.8	1/31.0
					TOTAL	50/2,362.7	10/632.9

Appendix III cont.

By Division

TDP No.	Task No.	Task Name	Leader	Division	Location	BY + 1 Target Allowance	BY + 1 Increase
NEC-080-80-EI-A-5	88C2W1	Systematics of Selected Fishes & Crustaceans	Cohen, D.	National Systematics Laboratory	Washington, DC	9/236.2	0/21.6
NEC-038-80-EI-A-5	88C2P9	Disease and Environmental Stress	Murchelano	Pathobiology	Oxford	7/128.4	4/285.2
NEC-039-80-EI-A-5	88C2Q2	Life Studies: Comparative Pathobiology	Rosenfield	Pathobiology	Oxford	7/153.1	4/303.9
NEC-044-80-AQ-A-5	88E4P3	Aquaculture: Control of Molluscan Disease	Blogoslawski	Pathobiology	Milford	5/180.9	
NEC-092-80-SP-A-5	New	Facilities (Bldg Extension) (Health of Oceanic Fish and Shellfish)	Rosenfield	Pathobiology	Oxford		0/690.0
NEC-102-80-RF-A-5	New	Striped Bass Disease	Rosenfield	Pathobiology	Oxford		4/212.2
					TOTAL	19/462.4	12/1491.3
NEC-003-80-EI-A-5	88A3F1	Fishery Analysis: Multispecies Northwest Atlantic	Brown	Resource Assessment	Woods Hole	23/818.3	10/711.6
NEC-004-80-S2-A-5	88A2F1	Bottom Trawl Survey Operations	Azarovitz	Resource Assessment	Woods Hole	12/462.8	7/276.0
NEC-005-80-FE-A-5	88A3F3	Automatic Age Reader System Development	Nichy	Resource Assessment	Woods Hole	0/110.0	
NEC-019-80-S3-A-5	88A2F1	Pelagic Fish Survey Assessment Research (Hydroacoustics)	Anderson	Resource Assessment	Woods Hole	1/133.4	1/100.0
NEC-046-80-RF-A-5	88F9P1	Biological Assessment: Sportfish	Wilk	Resource Assessment	Sandy Hook	3/111.8	
NEC-055-80-EC-A-5	88F6F1EJ	Fishery Analysis: Economics	Brown	Resource Assessment	Woods Hole	11/596.6[1]	4/296.6
					TOTAL	50/2232.9	22/1384.2

[1]Currently 8/196.6 (3/400 - FY 79 increase)

Appendix III cont.

By Division

TDP No.	Task No.	Task Name	Leader	Division	Location	BY + 1 Target Allowance	BY + 1 Increase
NEC-010-80-FE-A-5	88A5G2MC	Sampling and Harvesting Gear Development	Corbett	Resource Utilization	Gloucester	4/118.3	3/200.0
NEC-070-80-PT-A-2	88F810	Product Quality, Safety & Standards	Gadbois	Resource Utilization	Gloucester	9/267.2	3/200.0
NEC-072-80-PT-A-2	88F719	Resource Development and Improvement	Learson	Resource Utilization	Gloucester	14/409.9	2/100.0
NEC-079-80-RF-A-5	New	Sportfishing Utilization Technology	Learson	Resource Utilization	Gloucester		3/79.0
					TOTAL	27/795.4	11/579.0
NEC-013-80-S2-A-5	88A2F6	Biochemical Stock Identification	Ridgway	Unattached	Woods Hole	0/3.1	
NEC-017-80-S2-A-5	88A2F7	Manned Undersea Research and Technology	Cooper	Unattached	Woods Hole	5/132.7	2/150.0
NEC-020-80-SP-A-5	900040	General Support	Stern	Unattached	Woods Hole	72/2012.5	
NEC-032-80-FA-A-5	88A3P1	Data Management	Pacheco	Unattached	Sandy Hook	4/148.7	2/41.6
NEC-050-80-FA-A-5	88A3F2	Northeast Fisheries Data Processing & Information System Development	Heyerdahl/ Handy	Unattached	Woods Hole	8/446.5	5/400.0
NEC-051-80-RF-A-5	88F9F2	Aquarium	Wheeler	Unattached	Woods Hole	3/97.5	0/27.0
NEC-053-80-00-A-0	New	Vessel Construction		Unattached			0/3500.0
NEC-054-80-00-A-0	New	Facility Addition - Building Construction		Unattached			0/1250.0
NEC-056-80-FA-A-5	88A3F4	Fishery Analysis: Management Council Liaison	Smith, K.	Unattached	Woods Hole	2/67.5	1/20.8
NEC-101-80-EI-A-5	New	Rehabilitation of Seawater and Aquarium System	Sindermann	Unattached	Sandy Hook		0/167.0
NEC-103-80-00-A-0	New	Construction of Vessel Pier		Unattached			0/1098.0
NEC-104-80-00-A-0	New	Acquisition of Two Inshore Research Vessels		Unattached			0/1300.0
					TOTAL	94/2908.5	10/7954.4
					GRAND TOTAL	305/11,080.2[1]	105/15,690.9

[1]Currently 10,680.2K (3/400 - FY 79 increase NEC-055)

APPENDIX IV - PHYSIOLOGY-BIOCHEMISTRY, MILFORD, CONN.

Sampling Protocol

Samples of organisms will be taken from both "clean" and impacted areas.

Teleosts

A. Sampling: 10 individuals per sp at selected clean and impact stations.

B. Treatments:

1. Excise kidney, brain, and 1-2 g gonad

2. Place each in small plastic bag, pinch and fold to get out as much air as possible; wrap tightly with masking tape and label (use code; sample data sheet is enclosed).

3. Freeze at as low temperature as possible.

4. Take blood samples from winter flounder and yellowtail flounder and any other species where 10 or more individuals are available. Centrifuge blood and save and freeze serum. Discard cells.

C. Species, in order of importance:

Flounder (yellowtail, winter), Gadoids (cod, haddock, pollock), Clupeids (herring, alewife), and Mackerel

Crustaceans

A. Sampling: as for teleosts

B. Treatments:

1. Excise, package (as shown above), and freeze gonads (all), digestive gland (1-2 g), and blood.

2. Return live specimens from end-of-cruise stations to the laboratory.

C. Species, in order of importance:

Lobster, Jonah Crab

Molluscs

A. Sampling: as for teleosts

B. Treatments:

1. Excise, package (as above), and freeze gills, adductor muscle (1-2 g), mantle, and gonads.

*2. Return live specimens as for crustaceans.

C. Species in order of importance:

Ocean Scallop, ocean Quahog, other spp. of opportunity

D. Sampling procedure for sea scallop (Placopecten magellanicus) Adductor muscle, taken at sea:

1. Sampler per station = An optimal number would be at least 12 animals taken at each station, if possible.

2. Data needed =

a) Keep accurate log of station number (salinity, temperature, depth) and date, and please make copy for me.

b) Please note size (cm) and sex (relative ripeness of gonad would also be helpful) of each animal from which adductor muscle is taken.

c) Use your own code, but samples for each station should be numbered, to keep track of size and sex.

3. Sampling procedure proper:

a) Excise adductor muscle as cleanly as possible (so no gonad tissue, digestive gland, or whatever, will contaminate the muscle tissue); cut away the outside of the muscle, if necessary or if it's easier, we only need about 2 grams.

b) Place tissue in small plastic bags (home-made from Zip-Lock bags, supplied in box with tape and marker) and squeeze around to eliminate as much air as possible, then

c) Wrap tightly with masking tape, number (or whatever your system is), and freeze-store** by station groups, as was done on the Sept. '77 cruise.

4. When off-loading ship, the best treatment would be to store the samples with some hunks of dry ice in a freezer, to await pick-up and transport to the Milford Laboratory.

---

*Please bring back to the laboratory live lobsters, crabs and bivalve molluscs caught during the last three days of the cruise.

**The lower the temperature, the better--20°C would be very good.