Other specimens, opened at various times, show that this fish is very general feeder, eating all kinds of small Crustacea, Annelids, bivalve and univalve mollusks, &c.

TAUTOG; BLACK FISH; (*Tautoga onitis.*)

Specimens caught at Wood's Hole, May 23, contained the common rock-crab, *Cancer irroratus;* hermit-crabs, *Eupagurus longicarpus;* shells, *Tritia trivittata*, all crushed.

Others caught May 26 contained *Eupagurus pollicaris; E. longicarpus;* the barnacle, *Balanus crenatus;* the squid, *Loligo Pealii; Tritia trivittata.* Others taken May 29 had *Cancer irroratus;* mud-crabs, *Panopeus depressus;* lady-crabs, *Platyonichus ocellatus;* shells, *Tritia trivittata, Crepidula fornicata, Argina pexata*, and the scollop, *Pecten irradians;* barnacles, *Balanus crenatus*, all well broken up.

Another taken May 31 contained *Platyonichus ocellatus; Tritia trivittata.*

Others taken June 3 contained the mud-crab, *Panopeus depressus;* triangular crab, *Pelia mutica; Crepidula unguiformis; Triforis nigrocinctus;* the common muscle, *Mytilus edulis;* and the "horse-muscle," *Modiola modiolus.*

Another, on June 10, contained the common rock-crab, *Cancer irroratus;* mud-crab, *Panopeus Sayi; Nucula proxima;* several ascidians, *Cynthia partita* and *Leptoclinum albidum.*

Two caught July 8 and 15 contained small lobsters, *Homarus Americanus; Crepidula fornicata; Bittium nigrum;* a bryozoan, *Crisia eburnea;* sand-dollars, *Echinarachnius parma.*

A specimen caught in August contained long-clams, *Mya arenaria;* muscles, *Mytilus edulis; Petricola pholadiformis.*

WEAK-FISH; SQUETEAGUE; (*Cynoscion regalis.*)

Several caught in seines at Great Egg Harbor, New Jersey, April, 1871, with menhaden, &c., contained large quantities of shrimp, *Crangon vulgaris*, unmixed with other food.

Specimens taken at Wood's Hole, in July, often contained sand-crabs, *Platyonichus ocellatus;* and very frequently squids, *Loligo Pealii.*

KING-FISH; (*Menticirrus nebulosus.*)

Four specimens taken in seines at Great Egg Harbor, April, 1871, contained only shrimp, *Crangon vulgaris.*

Others taken at Wood's Hole, May 29, were filled with *Crangon vulgaris.*

Specimens taken in July contained rock-crabs, *Cancer irroratus;* squids, *Loligo Pealii.*

RUDDER-FISH; (*Palinurichthys perciformis.*)

A specimen caught at Wood's Hole, in August, contained a small *Squilla empusa;* and young squids, *Loligo Pealii.*

MACKEREL; (*Scomber vernalis.*)

Specimens taken July 18, twenty miles south of No Mans Land, contained shrimps, *Thysanopoda*, sp.; larval crabs in the zoëa and megalops stages of development; young of hermit-crabs; young of lady-crabs, *Platyonichus ocellatus;* young of two undetermined Macroura; numerous small Copepod Crustacea; numerous shells of a Pteropod, *Spirialis Gouldii.*

SMALL TUNNY; (*Orcynus thunnina.*)

One specimen caught at Wood's Hole, in August, contained eleven squids, *Loligo Pealii.*

BONITO; (*Sarda pelamys.*)

Specimens taken at Wood's Hole, in August, contained an abundance of shrimp, *Crangon vulgaris.*

BLUE-FISH; HORSE-MACKEREL; (*Pomatomus saltatrix.*)

Specimens caught at Wood's Hole, in August, frequently contained squids, *Loligo Pealii;* also various fishes.

Off Fire Island, Long Island, August, 1870, Mr. S. I. Smith saw blue-fishes feeding eagerly on the free-swimming males (heteronereis) of *Nereis limbata*, (p. 318,) which was then very abundant.

SEA-ROBIN; (*Prionotus Carolinus.*)

A specimen caught at Wood's Hole, May 27, contained shrimp, *Crangon vulgaris;* and a small flounder.

Another caught May 29 contained Amphipod Crustacea, *Anonyx* (?), sp.; and *Crangon vulgaris.*

Specimens dredged in Vineyard Sound, in August, contained mud-crabs, *Panopeus Sayi;* rock-crabs, *Cancer irroratus;* and several small fishes.

TOAD-FISH; (*Batrachus tau.*)

Several specimens examined at Great Egg Harbor, New Jersey, April, 1871, contained young edible crabs, *Callinectes hastatus* of various sizes up to those with the carapax two inches broad; shrimp, *Crangon vulgaris;* prawn, *Palæmonetes vulgaris; Ilyanassa obsoleta;* various fishes, especially the pipe-fish, *Syngnathus Peckianus;* and the anchovy, *Engraulis vittatus.*

A specimen caught at Wood's Hole, in July, contained the common rock-crab, *Cancer irroratus.*

GOOSE-FISH; ANGLER; (*Lophius Americanus.*)

A specimen caught in Vineyard Sound, in June, contained crabs, *Cancer irroratus;* and squids, *Loligo Pealii.*

COD; (*Gadus morrhua, var.*)

The cod-fishes devour a great variety of Crustacea, Annelids, Mollusks, star-fishes, &c. They swallow large bivalve shells, and after digesting the contents spit out the shells, which are often almost unin-

jured. They are also very fond of shrimps, and of crabs, which they frequently swallow whole, even when of large size. The brittle star-fishes (*Ophiurans*) are also much relished by them. I have taken large masses of the *Ophiopholis aculeata* from their stomachs on the coasts of Maine and Labrador; and in some cases the stomach would be distended with this one kind, unmixed with any other food.

In this region I have not been able to make any new observations on the food of the cod. This deficiency is partially supplied, however, by the observations made by me on the coast of Maine, &c., coupled with the very numerous observations made at Stonington, Connecticut, many years ago, by Mr. J. H. Trumbull, who examined large numbers of the stomachs of cod and haddock, caught within a few miles of that place, for the sake of the rare shells that they contained. This collection of shells, thus made, was put into the hands of the Rev. J. H. Linsley, who incorporated the results into his "Catalogue of the Shells of Connecticut," which was published after his death, and in a somewhat unfinished state, in the American Journal of Science, Series I, vol. xlviii, p. 271, 1845. In that list a large number of species are particularly mentioned as from the stomachs of cod and haddock, at Stonington, all of which were collected by Mr. Trumbull, as he has informed me, from fishes caught on the fishing-grounds near by, on the reefs off Watch Hill, &c. Many other northern shells, recorded by Mr. Linsley as from Stonington, but without particulars, were doubtless also taken from the fish-stomachs by Mr. Trumbull. There was no record made of the Crustacea, &c., found by him at the same time.

The following list includes the species mentioned by Mr. Linsley as from the cod. For greater convenience the original names given by him are added in parentheses, when differing from those used in this report:

List of mollusks, &c., obtained by Mr. J. H. Trumbull, from cod-fish caught near Stonington, Connecticut.

GASTROPODS.

Sipho Islandicus (?), young, (Fusus corneus.)
Ptychatractus ligatus, (Fasciolaria ligata.)
Turbonilla interrupta, (Turritella interrupta.)
Turritella erosa.
Rissoa exarata, (?), (Cingula arenaria.)
Lunatia immaculata, (Natica immaculata.)
Amphisphyra pellucida, (Bulla debilis.)
Chiton marmoreus, (?), (Chiton fulminatus.)

LAMELLIBRANCHS.

Martesia cuneiformis, (Pholas cuneiformis.)
Periploma papyracea, (Anatina papyracea.)
Thracia truncata.

Tagelus divisus, (Solecurtus fragilis.)
Semele equalis, (?), (Amphidesma æqualis.)
Ceronia arctata, (Mesodesma arctata.)
Montacuta elevata, (Montacuta bidentata.)
Callista convexa, young, (Cytherea morrhuana.)
Cardium pinnulatum.
Cyprina Islandica.
Gouldia mactracea, (Astarte mactracea.)
Yoldia sapotilla, (Nucula sapotilla.)
Y. limatula, (N. limatula.)
Nucula proxima.
N. tenuis.
Modiolaria nigra, (Modiola nexa.)
Crenella glandula, (M. glandula.)
Pecten tenuicostatus, young, (Pecten fuscus.)

ECHINODERMS.

Echinarachnius parma.

HADDOCK; (*Melanogrammus æglifinus.*)

The haddock is not much unlike the cod in the character of its food. It is, perhaps, still more omnivorous, or, at least, it generally contains a greater variety of species of shells, &c.; many of the shells that it habitually feeds upon are burrowing species, and it probably roots them out of the mud and sand.

A complete list of the animals devoured by the haddock would doubtless include nearly all the species belonging to this fauna. We have had few opportunities for making observations on the food of the haddock south of Cape Cod, but have examined many from farther north.

A specimen taken at Wood's Hole, November 6, 1872, contained a large quantity of *Gammarus natator*, and a few specimens of *Crangon vulgaris*. Another from Nantucket contained the same species.

The following species of shells were mentioned by Mr. Linsley, in his catalogue, as from the haddock:

List of mollusks obtained from stomachs of haddock, at Stonington, Connecticut, by Mr. J. H. Trumbull.

Neptunea pygmæa, (Fusus Trumbulli.)
Astyris zonalis, (Buccinum zonale.)
Bulbus flavus, (?), (Natica flava.)
Margarita obscura,
Actæon puncto-striata, (Tornatella puncto-striata.)
Cylichna alba, (Bulla triticea.)
Serripes Grœnlandicus, (?), (Cardium Grœnlandicum.)

The above list doubtless contains only a small portion of the species collected by Mr. Trumbull, but they are all that are specially recorded.

As an illustration of the character and diversity of the haddock's food, I add a list of the species taken from the stomach of a single specimen, from the Boston market, and doubtless caught in Massachusetts Bay, September, 1871.

GASTROPODS.

Natica clausa.
Margarita Grœnlandica.

LAMELLIBRANCHS.

Leda tenuisulcata.
Nucula proxima.
N. tenuis.
Crenella glandula.

ECHINODERMS.

Psolus phantapus.
Lophothuria Fabricii.

In addition to these there were fragments of shrimp, probably *Pandalus annulicornis*, and numerous Annelids, too much digested for identification.

TOM-COD; FROST-FISH; (*Microgadus tom-codus.*)

Several specimens from New Haven Harbor, January 30, contained numerous Amphipods, among which were *Mœra levis; Gammarus, sp.; Ampelisca, sp.;* an undetermined Macrouran; numerous Entomostraca; the larva of *Chironomus oceanicus.*

A lot taken in a small pond at Wood's Hole, in March, by Mr. Vinal N. Edwards, contained the common shrimp, *Crangon vulgaris;* large numbers of the green shrimp, *Virbius zostericola;* the prawn, *Palæmonetes vulgaris;* large quantities of Amphipods, especially of *Gammarus annulatus, G. natator, Calliopius læviuscula,* and *Microdeutopus minax;* and smaller numbers of *Gammarus ornatus* and *G. mucronatus.*

Another lot of twelve, taken in April at the same place, contained most of the above, and in addition several other Amphipods, viz: *Mœra levis, Pontogeneia inermis, Ptilocheirus pinguis,* and *Caprella;* also *Nereis virens,* and various small fishes.

OCELLATED FLOUNDER; SUMMER FLOUNDER; (*Chœnopsetta ocellaris.*)

Several specimens taken in the seines, at Great Egg Harbor, New Jersey, in April, contained large quantities of shrimp, *Crangon vulgaris* and *Mysis Americana;* one contained a full-grown *Gebia affinis.*

One caught at Wood's Hole, June 6, contained twenty-six specimens of *Yoldia limatula;* and numerous shells of *Nucula proxima, Angulus tener,* and *Tritia trivittata;* and Amphipod Crustacea belonging to the genus *Ampelisca.*

Specimens caught at Wood's Hole, in July, contained rock-crabs, *Cancer irroratus; Pinnixa cylindrica; Crangon vulgaris;* squids, *Loligo Pealii; Angulus tener; Nucula proxima;* and many "sand-dollars," *Echinarachnius parma.*

WINTER FLOUNDER; (*Pseudopleuronectes Americanus.*)

A specimen caught at Wood's Hole, in August, contained large numbers of *Bulla solitaria.*

SPOTTED FLOUNDER; (*Lophopsetta maculata.*)

Numerous specimens caught in seines at Great Egg Harbor, April, 1871, contained large quantities of shrimp, especially *Mysis Americana* and *Crangon vulgaris;* the prawn, *Palæmonetes vulgaris;* numerous Amphipods, *Gammarus mucronatus;* one contained a *Gebia affinis.*

MINNOW; (*Fundulus pisculentus.*)

Specimens caught in July, at Wood's Hole, contained large numbers of *Melampus bidentatus*, unmixed with other food.

SEA-HERRING; (*Clupea elongata.*)

Specimens taken in Vineyard Sound, May 20, contained several shrimp, *Crangon vulgaris*, about 1.5 inches long; *Mysis Americana*, and large numbers of an Amphipod, *Gammarus natator;* also small fishes.

SHAD; (*Alosa tyrannus.*)

Several specimens taken in the seines, at Great Egg Harbor, April, 1871, contained finely-divided fragments of numerous Crustacea, among which were shrimp, *Mysis Americana.*

Several from the mouth of the Connecticut River, May, 1872, contained fragments of small Crustacea, (*Mysis*, &c.)

HICKORY SHAD; (*Pomolobus mediocris.*)

Several specimens taken in the seines at Great Egg Harbor, April, 1872, contained large quantities of fragmentary Crustacea; one contained recognizable fragments of shrimp, *Crangon vulgaris.*

MENHADEN; (*Brevoortia menhaden.*)

A large number of specimens freshly caught in seines at Great Egg Harbor, April, 1871, were examined, and all were found to have their stomachs filled with *large quantities of dark mud.* They undoubtedly swallow this mud for the sake of the microscopic animal and vegetable organisms that it contains. Their complicated and capacious digestive apparatus seems well adapted for this crude and bulky food.

FILE-FISH; (*Ceratacanthus aurantiacus.*)

A specimen taken at Wood's Hole, in August; contained a quantity of the finely-divided stems and branches of a Hydroid, *Pennaria tiarella.*

DUSKY SHARK; (*Eulamia obscura.*)

Several specimens caught at Wood's Hole, in July and August, contained lobsters, *Homarus Americanus;* rock-crabs, *Cancer irroratus.*

BLUE SHARK; (*Eulamia Milberti.*)

A large specimen caught at Wood's Hole, in August, contained a quantity of small bivalve-shells, *Yoldia sapotilla.*

TIGER-SHARK; (*Galerocerdo tigrina.*)

Specimens caught at Wood's Hole, in August, contained large univalve shells, *Buccinum undatum* and *Lunatia heros.*

DOG-FISH; (*Mustelus canis.*)

Several specimens caught at Wood's Hole, in August, contained lobsters, *Homarus Americanus;* spider-crabs, *Libinia canaliculata;* rock-crabs, *Cancer irroratus.*

SAND-SHARK; (*Eugomphodus littoralis.*)

Many specimens taken at Wood's Hole, in July and August, contained lobsters, *Homarus Americanus*, in abundance; *Cancer irroratus;* and squids, *Loligo Pealii.*

COMMON SKATE; "SUMMER SKATE;" (*Raia diaphana.*)

A specimen taken at Wood's Hole, May 14, contained rock-crabs, *Cancer irroratus;* a young skate; a long slender fish, (*Ammodytes ?.*) Another, caught in July, contained *Cancer irroratus.*

PEAKED-NOSE SKATE; (*Raia lævis ?.*)

Specimens caught in Vineyard Sound, May 14, contained numerous shrimps, *Crangon vulgaris;* several *Conilera concharum;* several Annelids, among them *Nephthys ingens; Meckelia ingens;* two specimens of *Phascolosoma Gouldii;* razor-shells, *Ensatella Americana*, (the "foot" only, of many specimens;) a small fish, *Ctenolabrus burgall.* Specimens taken at Menemsha, in July, contained large numbers of crabs, *Cancer irroratus;* and of lobsters, *Homarus Americanus.*

STING-RAY; (*Trygon centroura.*)

Specimens caught at Wood's Hole, in July and August, contained large numbers of crabs, *Cancer irroratus;* squids, *Loligo Pealii;* clams, *Mya arenaria; Lunatia heros.*

LONG-TAILED STING-RAY; (*Myliobatis Freminvillei.*)

Specimens taken in Vineyard Sound, in July, contained an abundance of lobsters, *Homarus Americanus;* crabs, *Cancer irroratus;* also clams, *Mya arenaria;* and *Lunatia heros.*

"RABBIT-FISH."

A specimen taken at Wood's Hole, in July, contained a lobster, *Homarus Americanus.*

"FOG-FISH."

A specimen caught at Wood's Hole, July 1, contained hermit-crabs, *Eupagurus pollicaris.*

C.—THE METAMORPHOSES OF THE LOBSTER, AND OTHER CRUSTACEA.—BY S. I. SMITH.

Most of the larger crustaceans of our coast, whatever may be their habits when adult, are, in the early stages of their existence after hatching from the eggs, essentially free-swimming animals, living a large part of the time near the surface of the water. In this stage they are constantly exposed to the attacks of other predaceous animals, and, as they occur in vast numbers, afford food for many valuable fishes. They are most abundant at the surface in calm, clear weather, and they especially resort, like the young of many other marine animals, to spots and streaks of smooth water where the tidal currents meet.

Very little has yet been written upon the forms or habits of the young crustaceans of our own coast; but, in connection with the investigations carried on in Vineyard Sound and Buzzard's Bay, a great amount of material for such work was collected. This material has not yet been fully studied, and only a sketch of some of the more important results is presented in this report. During the few weeks in June and July, in which I was myself at Wood's Hole, the time was so fully occupied in collecting, that very little time was left for studying the animals while alive; hence most of the observations which follow, except occasionally those on color, have been subsequently made from specimens preserved in alcohol. While at Wood's Hole, I was much assisted in obtaining these young animals by every one then associated there in the work of the commission; and I would especially acknowledge such assistance from Dr. W. G. Farlow, Mr. V. N. Edwards, and Capt. John B. Smith. After I left, the collecting was kept up as before, and many valuable notes were made by Professors Verrill and J. E. Todd.

Special attention was given to the early stages of the lobster, as perhaps the most important crustacean found on our coast, and I have gone more fully into the account of its early history than that of any other species. As this will serve as an example to illustrate the development of most of the other Macrourans, it is presented first.

Numerous specimens of the free-swimming young of the lobster, in different stages of growth, were obtained in Vineyard Sound during July, but it was too late for any observations upon the young within the egg. This deficiency was partially supplied by a few observations at New Haven in 1872. Eggs taken May 2, from lobsters captured at New London, Connecticut, had embryos well advanced, as represented in fig. 4. In this stage the eggs are slightly elongated spheroids, about 2.1^{mm} in the longer diameter, and 1.9^{mm} in the shorter. One side is rendered very opaque dark green by the unabsorbed yolk mass, while the other shows the eyes as two large black spots, and the red pigment spots on the edge of the carapax, bases of the legs, &c., as irregular lines of pink markings.

In a side view of the embryo, the lower edge of the carapax (*b*, figure)

is clearly defined and extends in a gentle curve from the middle of the eye to the posterior border of the embryo. This margin of the carapax is marked with dendritic spots of red pigment. The whole dorsal portion, fully one-half the embryo, is still occupied by the unabsorbed portion of the yolk, (*a*, *a*,) of which the lower margin, represented in the figure by a dotted line, extends from close above the eye in a curve nearly parallel with the lower margin of the carapax, but with a sharp indentation a little way behind the eye. The eyes (*c*) are large, nearly round, not entirely separated from the surrounding tissues, and with a central portion of black pigment. The antennulæ (*d*) are simple, sack-like appendages, arising from just beneath the eyes, with the terminal portion turned backward and marked with several large dendritic spots of red pigment. The antennæ (*e*) are but little larger than the antennulæ and are sack-like and without articulations, but the scale and flagellum are separated and bent backward, the scale being represented by the large and somewhat expanded lobe, and the flagellum by a shorter and slender lobe which arises from near the base of the scale. The mandibles, both pairs of maxillæ, and the first and second pairs of maxillipeds are not sufficiently developed to be seen without removing the antennæ and the edge of the carapax, and are only represented by several small lobes, of which the anterior, apparently representing the mandibles, are distinctly defined, while those that follow are much smaller, indistinct, and confused. The first and second maxillipeds are each represented by a small lobe divided at the extremity. The external maxillipeds (*f*) are well developed and almost exactly like the posterior cephalothoracic legs. Both the branches are simple and sack-like, the main branch, or endognathus,† much larger and slightly longer than the outer branch, or exognathus, which is quite slender. The five pairs of

Fig. 4.*

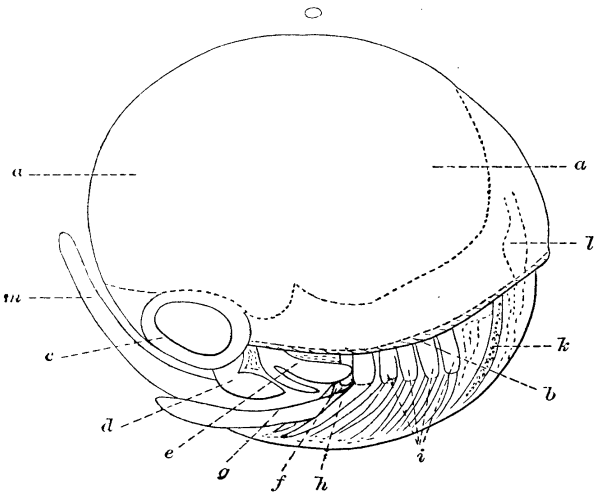

No. 610

* Embryo, some time before hatching, removed from the external envelope and shown in a side view enlarged twenty diameters; *a*, *a*, dark-green yolk mass still unabsorbed; *b*, lateral margin of the carapax marked with many dendritic spots of red pigment; *c*, eye; *d*, antennula; *e*, antenna; *f*, external maxilliped; *g*, great cheliped which forms the big claw of the adult; *h*, outer swimming branch or exopodus of the same; *i*, the four ambulatory legs with their exopodal branches; *k*, intestine; *l*, heart; *m*, bilobed tail seen edgewise. [Drawn by S. I. Smith.]

† To prevent confusion, the terms here used are those proposed by Milne Edwards to designate the different branches of the cephalothoracic appendages: *endopodus*, for the main branch of a leg; *exopodus*, for the accessory branch, (*a* in fig. *D*, Plate IX;) *epipodus*, for the flabelliform appendage, (*b*;) and *endognathus*, *exognathus*, and *epignathus*, for the corresponding branches of the mouth organs.

cephalothoracic legs (*g*, *h*, *i*) are all similar and of about the same size, except the main branch of the first pair, (*g*,) which is much larger than that of the others, but is still sack-like and entirely without articulations. The outer or exopodal branches of all the legs are slender, wholly unarticulated, sack-like processes, while the inner or main (endopodal) branches of the four posterior pairs are similar, but much stouter and slightly longer processes arising from the same bases. The bases of all the legs are marked with dendritic spots of red pigment like those upon the lower margin of the carapax.

The abdomen (*m*) is curved round beneath the cephalothorax, the extremity extending between and considerably in front of the eyes. The segments are scarcely distinguishable. The extremity, as seen from beneath the embryo, is slightly expanded into a somewhat oval form, and very deeply divided by a narrow sinus, rounded at the extremity. The lobes into which the tail is thus divided are narrow, and somewhat approach each other toward the extremities, where they are each armed along the inner edge with six small obtuse teeth.

The heart (*l*) is readily seen, while the embryo is alive, by its regular pulsations. It appears as a slight enlargement in the dorsal vessel, just under the posterior portion of the carapax. The intestine (*k*) is distinctly visible in the anterior portion of the abdomen as a well defined, transparent tube, in which float little granular masses. This material within the intestine is constantly oscillating back and forth as long as the embryo is alive.

The subsequent development of the embryo within the egg was not observed. The following observations on the young larvæ, after they have left the eggs, have all been made upon specimens obtained in Vineyard Sound, or the adjacent waters, during July. These specimens were mostly taken at the surface in the day-time, either with the towing or hand net. They represent three quite different stages in the true larval condition, besides a later stage approaching closely the adult. The exact age of the larvæ of the first stage was not ascertained, but was probably only a few days, and they had, most likely, molted not more than once. Between the third stage, here described, and the last, there is probably an intermediate form wanting.

First stage.—In this stage, (Plate IX, Figs. A, B, C, D,) the young are free-swimming Schizopods about a third of an inch (7.8 to 8.0^{mm}) in length, without abdominal appendages, and with six pairs of pediform cephalothoracic appendages, each with the exopodus developed into a powerful swimming organ. The general appearance is represented in the figures. The eyes are bright blue; the anterior portion and the lower margin of the carapax and the bases of the legs are speckled with orange; the lower margin, the whole of the penultimate, and the basal portion of the ultimate segment of the abdomen, are brilliant reddish orange.

The antennulæ (Fig. *C.*) are short and sack-like, with a single articu-

lation at the base, and three setæ at the tip. The antennæ have large well developed scales, furnished along the inner margin with long plumose hairs, but the flagellum is shorter than the scale, not divided into segments, and has three plumose setæ at tip. The mandibles are unlike on the two sides; the inferior edges are armed with acute teeth, except at the posterior angle, where there is a small molar area; the palpi are very small, with the three segments just indicated. The exognathus in both pairs of maxillæ is composed of only one article, and is furnished with several setæ at tip. In the first maxillipeds the exognathus is an unarticulated process, furnished with short plumose hairs on the outer side. The second maxillipeds have the principal branch cylindrical, not flattened and appressed to the inner mouth organs as in the adult; the exognathus is short, and as yet scarcely flabelliform; and the epignathus is a simple process, with not even the rudiment of a branchia. The external maxillipeds are pediform, the endognathus as long as and much resembling the endopodi of the posterior legs, while the exognathus is like the exopodi of all the legs, being half as long as the endognathus, and the terminal portion furnished along the edges with long plumose hairs. The epignathus and the branchiæ are very rudimentary, represented by minute sack-like processes. The anterior cephalothoracic legs, (Fig. *D*,) which in the adult develop into the big claws, are exactly alike, and no longer than the external maxillipeds. The pediform branch is, however, somewhat stouter than in the other legs, and subcheliform. The legs of the second and third pairs are similar to the first, but not as stout. The legs of the fourth and fifth pairs are still more slender, and styliform at the extremity, as in the adult.

The exopodal branches of all the legs and of the external maxillipeds are quite similar, and differ very little in size. In life, while the animal is poised at rest in the water, they are carried horizontally, as represented in Figure *B*, or are curved up over the carapax, sometimes so as almost to cover it. The blood circulates rapidly in these appendages, and they undoubtedly serve, to a certain extent, as respiratory organs, as well as for locomotion. By careful examination, small processes were found representing the normal number of branchiæ to each leg.* These rudimentary branchiæ, however, differ somewhat in different specimens, being very small, and scarcely distinguishable, in what appear to be younger individuals, from the rudimentary epipodi, while in others, apparently older, they are further developed, being larger, more cellular in structure than the epipodi, and even showing an approach to crenulation in the margins, as shown in Figure *D*.

The abdomen is slender, the second to the fifth segments each armed with a large dorsal spine, curved backward, and with the lateral angles

* The number of branchiæ, or branchial pyramids, in the American lobster is twenty on each side; a single small one upon the second maxilliped, three well developed ones upon the external maxilliped, three upon the first cephalothoracic leg, four each upon the second, third, and fourth, and one upon the fifth.

produced into long spines, and the sixth segment with two dorsal spines. The proportional size and the outline of the last segment are shown in Figure *B;* its posterior margin is armed with a long and stout central spine, and each side with fourteen or fifteen plumose spines or setæ, which are articulated to the margin.

In this stage the young were first taken July 1, when they were seen swimming rapidly about at the surface of the water among great numbers of zoëæ, megalops, and copeopods. Their motions and habits recall at once the species of *Mysis* and *Thysanopoda*, but their motions are not quite as rapid and are more irregular. Their bright colors render them conspicuous objects, and they must be readily seen and captured by fishes. They were frequently taken at the surface in different parts of Vineyard Sound from July 1 to 7, and several were taken off Newport, Rhode Island, as late as July 15, and they would very likely be found also in June, judging from the stage of development to which the embryos had advanced early in May in Long Island Sound. Besides the specimens taken in the open water of the Sound, a great number were obtained July 6, from the well of a lobster-smack, where they were swimming in great abundance near the surface of the water, having undoubtedly been recently hatched from the eggs carried by the female lobsters confined in the well. Some of these specimens lived in vessels of fresh sea-water for two days, but all efforts to keep them alive long enough to observe their molting failed. They appeared, while thus in confinement, to feed principally upon very minute animals of different kinds, but were several times seen to devour small zoëæ, and occasionally when much crowded, so that some of them became exhausted, they fed upon each other, the stronger ones eating the weaker.

Second stage.—In the next stage the young lobsters have increased somewhat in size, and the abdominal legs of the second to the fifth segments have appeared. The rostrum is much broader, and there are several teeth along the edges. The basal segments of the antennulæ have become defined, and the secondary flagellum has appeared, but is not subdivided into segments. The antennæ and mouth organs have undergone but slight changes. The first cephalothoracic legs are proportionally larger and stouter than in the first stage, and have become truly cheliform. The succeeding legs have changed little. The epidodi of all the legs and of the external maxillipeds have increased in size, and the branchial processes are distinctly lobed along the edges, and have begun to assume the form of true branchiæ. The segments of the abdomen have the same number of spines, but they are relatively somewhat smaller, and the last segment is relatively smaller and broader at base. The appendages of the second to the fifth segments differ considerably in size in different specimens, but are nearly as long as the segments themselves; their terminal lamellæ, however, are represented only by simple sack-like appendages, without sign of segmentation, or clothing of hairs or setæ. The penultimate segment is still without appendages.

Specimens in this stage were taken only twice, July 1 and 15. They have the same habits and general appearance as in the first stage, but are readily distinguished by the possession of rudimentary abdominal legs. In color they are almost exactly the same, only the orange-colored markings are perhaps a little less intense.

Third stage.—In the third stage (Plate IX, figs. *E*, *F*, *G*,) the larvæ are about half an inch (12 to 13^{mm}) in length, and the integument is of a much firmer consistency than in the earlier stages. The antennulæ are still rudimentary, and considerably shorter than the rostrum, although the secondary flagellum has increased in length, and begins to show division into numerous segments. The antennæ retain the most marked feature of the early stages—the large size of the scale—but the flagellum is much longer than the scale, and begins to show division into segments. The mandibles, maxillæ, and first and second maxillipeds have changed very little, although in the second maxillipeds the extremity of the exognathus begins to assume a flagelliform character, and the branchia is represented by a small process upon the side of the epignathus. The external maxillipeds have begun to lose their pediform character. The anterior legs have increased enormously in size, and those of the second and third pairs have become truly chelate, while the swimming exopodal branches of all the legs, as well as of the external maxillipeds, are relatively much smaller and more unimportant. The epipodi (fig. *G*) are furnished with hairs along the edges, and begin to assume the characters of these appendages in the adult. The branchiæ (fig. *G*) have developed rapidly, and have a single series of well-marked lobes along each side. The abdomen still has the spines characteristic of the earlier stages, though all of them are much reduced in size. The appendages of the second to the fifth segments have become conspicuous, their lamellæ have more than doubled in length, and the margins of the terminal half are furnished with very short ciliated setæ. The appendages of the penultimate segment (fig. *F*) are well developed, although quite different from those in the adult. The outer lamella wants wholly the transverse articulation near its extremity, and both are margined, except the outer edge of the outer lamella, with long plumose hairs. The last segment is relatively smaller and more quadrangular in outline, and the spines of the posterior margin are much smaller.

The only specimens procured in this stage were taken July 8 and 15. In color they were less brilliant than in the earlier stages, the orange markings being duller and whole animal slightly tinged with greenish brown.

In the next stage observed, the animal, about three-fifths of an inch (14 to 17^{mm}) long, has lost all its schizopodal characters, and has assumed the more important features of the adult lobster. It still retains, however, the free-swimming habit of the true larval forms, and was frequently taken at the surface, both in the towing and hand net. Although resembling the adult in many features, it differs so much that, were it

an adult form, it would undoubtedly be regarded as a distinct genus. The rostrum is bifid at tip, and armed with three or four teeth on each side toward the base, and in some specimens with a minute additional spine, on one or both sides, close to the tip. The flagella of the antennulæ extend scarcely beyond the tip of the rostrum. The antennal scale is very much reduced in size, but is still conspicuous and furnished with long plumose hairs along the inner margin, while the flagellum is as long as the carapax. The palpi of the mandibles have assumed the adult character, but the mandibles themselves have not acquired the massive molar character which they have in the older animal. The other mouth-organs have nearly the adult form. The anterior legs, although quite large, are still slender and just alike on the two sides, while all the cephalothoracic legs retain a distinct process in place of the swimming exopodi of the larva. The lateral angles of the second to the fifth abdominal segments are prolonged downward into long spiniform teeth, the appendages of these segments are proportionately much longer than in the adult, and the margins of their terminal lamellæ are furnished with very long plumose hairs. The lamellæ of the appendages of the penultimate segment are oval, and margined with long plumose hairs. The terminal segment is nearly quadrangular, as wide at the extremity as at the base, the posterior margin arcuate, but not extending beyond the prominent lateral angles, and furnished with hairs like those on the margins of the lamellæ of the appendages of the penultimate segment.

In color they resemble closely the adult, but the green color of the back is lighter, and the yellowish markings upon the claws and body are proportionately larger.

In this stage, the young lobsters swim very rapidly by means of the abdominal legs, and dart backward, when disturbed, with the caudal appendages, frequently jumping out of the water in this way like shrimp, which their movements in the water much resemble. They appear to be truly surface animals, as in the earlier stages, and were often seen swimming about among other surface animals. They were frequently taken from the 8th to the 28th of July, and very likely occur much later.

From the dates at which the different forms were taken, it is probable that they pass through all the stages here described in the course of a single season. How late the young, after reaching the lobster-like form, retain their free-swimming habit was not ascertained.

The young of the different kinds of shrimp, *Crangon vulgaris*, *Palæmonetes vulgaris*, and *Virbius zostericola*, when hatched from the egg, are free-swimming animals, similar in their habits to the young of the lobster. In structure, however, they are quite unlike the larvæ of the lobster, and approach more the zoëa stages of the crabs, which are described farther on. When they first leave the egg, they are without the five pairs of cephalothoracic legs, the abdomen is without appendages, and much as it is in the first stage of the young lobster, while the maxillipeds are

developed into long locomotive appendages, somewhat like the external maxillipeds of the first stage of the young lobster. While yet in the free-swimming condition the cephalothoracic legs are developed, the maxillipeds assume the adult form, and the abdominal limbs appear. The young of these shrimp are very much smaller than the young of the lobster, but they remain for a considerable time in this immature state, and were very frequently taken at the surface in the towing-net.

The young of *Crangon vulgaris* are hatched in the neighborhood of Vineyard Sound, in May and June, and arrive at the adult form before they are more than 4 or 5^{mm} long. Specimens of this size were taken at Wood's Hole, at the surface, on the evening of July 3. Later in the season much larger specimens were frequently taken at the surface both in the evening and day-time.

The young of *Palæmonetes vulgaris* did not appear till near the middle of July. Soon after hatching, the young are 3^{mm} long. The cephalothorax is short and broad with a slender spiniform rostrum in front, an enormous compound eye each side at the anterior margin, and a small simple eye in the middle of the carapax. The antennulæ are quite rudimentary, being short and thick appendages projecting a little way in front of the head; the peduncle bears at its extremity a very short obtuse segment representing the primary flagellum, and inside, at the base of this, a much longer plumose seta. The antennæ are slightly longer, than the antennulæ; the short peduncle bears a stout appendage, corresponding to the antennal scale, the terminal portion of which is articulated and furnished with long plumose setæ, and on the inside at the base of the scale, a slender process corresponding to the flagellum, and terminated by a long plumose seta. The first and second pairs of maxillæ are well formed and approach those of the adult. The three pairs of maxillipeds are all developed into powerful locomotive appendages; the inner branches, or endognathi, being slender pediform appendages terminated by long spines, while the outer branches, or epignathi, are long swimming appendages like the swimming branches of the legs of the young lobsters in the first stage. Both branches of the first maxillipeds are considerably shorter than those of the following pairs, but otherwise like them, and the inner branch of the second pair is somewhat shorter than that of the third, but its outer branch is about as long as that of the third pair. The five pairs of cephalothoracic legs are wanting or only represented by a cluster of minute sack-like processes just behind the outer maxillipeds. The abdomen is long and slender, wholly without appendages beneath, and the last segment is expanded into a short and very broad caudal lamina, the posterior margin of which is truncate with the lateral angles rounded; these angles each bear three, and the posterior margin itself eight more stout plumose setæ, the setæ of the posterior margin being longer than those upon the angles, and separated by broader spaces in which the margin is armed with numerous very small setæ. They arrive at the adult form before they are more than 5^{mm}

long, and they were often taken at the surface until 8 to 12^{mm} in length, the larger ones being taken in the first part of September.

The young of *Virbius zostericola* appear at about the same time as those of *Palæmonetes*, or a very little later, and pass through quite similar changes. The young attain the adult form when not more than 3^{mm} in length, and were frequently taken at the surface, both in the daytime and the evening, until they were 10^{mm} long, those 8 to 10^{mm} long being common in late August and early September.

The larval forms of several other Macrourans were taken at different times, but none of these were abundant, and I have not been able to connect them with the adult forms of any of the common species of the New England coast.

The young of *Gebia affinis*, only 4^{mm} long, but with nearly the form of the adult, was taken at the surface on the evening of September 3. The young of *Callianassa Stimpsoni*, about 4^{mm} long and with nearly all the adult characters, was also taken at the surface early in September.

The hermit-crabs (species of *Eupagurus*) when first hatched have much resemblance to the young of shrimp at the same period, and have similar habits. The young of one of the species, after it has passed through the earlier stages, and when it is about 3^{mm} long, and has all the cephalothoracic appendages similar to those of the adult, has still a symmetrical abdomen, like that of a shrimp, with long swimming-legs upon the second, third, fourth, and fifth segments, and broad laminated appendages upon the penultimate segment. Young, in this and the earlier stages, were common at the surface in Vineyard Sound during the last of August and the first of September.

Hippa talpoida probably passes through a metamorphosis similar to that of the hermit-crabs. The young attain nearly the adult form before they are more than 5 or 6^{mm} long, and specimens of this size were taken at the surface in Vineyard Sound on the evening of September 3. I have also found, early in September, the young a little larger upon the outer shores of Fire Island Beach, where they were left in large numbers by a high tide, and soon buried themselves in the sand.

All, or at least nearly all, the species of Brachyura living on the coast of New England pass through very complete and remarkable metamorphoses. The most distinct stages through which they pass were long ago described as two groups of crustaceans, far removed from the adult forms of which they were the young. The names zoëa and megalops, originally applied to these groups, are conveniently retained for the two best marked stages in the development of the crabs.

The young of the common crab, (*Cancer irroratus*,) in the earlier or zoëa stage, when first hatched from the egg, are somewhat like the form figured on Plate VIII, (fig. 37, the latest stage of the zoëa of *Cancer irroratus*, just before it changes to the megalops,) but the spines upon the carapax are all much longer in proportion, and there are no signs of

the abdominal legs or of any of the future legs of the megalops and crab. In this stage they are very small, much smaller than in the stage figured. After they have increased very much in size, and have molted probably several times, they appear as in the figure just referred to. The terminal segment of the abdomen, seen only in a side-view in the figure, is very broad and divided nearly to the base by a broad sinus, each side the margins project in long, spiniform, diverging processes, at the base of which the margin of the sinus is armed with six to eight spines on each side. When alive they are translucent, with deposits of dark pigment forming spots at the articulations of the abdomen and a few upon the cephalothorax and its appendages. In this stage they were taken at the surface in Vineyard Sound, in immense numbers, from June 23 to late in August. They were most abundant in the early part of July, and appeared in the greatest numbers on calm, sunny days.

Several zoëæ of this stage were observed to change directly to the megalops form, (Plate VIII, fig. 38.) Shortly before the change took place they were not quite as active as previously, but still continued to swim about until they appeared to be seized by violent convulsions, and after a moment began to wriggle rapidly out of the old zoëa skin, and at once appeared in the full megalops form. The new integument seems to stiffen at once, for in a very few moments after freeing itself from the old skin the new megalops was swimming about as actively as the oldest individuals.

In this megalops stage the animal begins to resemble the adult. The five pairs of cephalothoracic legs are much like those of the adult, and the mouth-organs have assumed nearly their final form. The eyes, however, are still enormous in size, the carapax is elongated and has a slender rostrum and a long spine projecting from the cardiac region far over the posterior border, and the abdomen is carried extended, and is furnished with powerful swimming-legs as in the Macroura. In color and habits they are quite similar to the later stage of the zoëæ from which they came; their motions appear, however, to be more regular and not so rapid, although they swim with great facility. In this megalops the dactyli of the posterior cephalothoracic legs are styliform, and are each furnished at the tip with three peculiar setæ of different lengths and with strongly curved extremities, the longest one simple and about as long as the dactylus itself, while the one next in length is armed along the inner side of the curved extremity with what appear to be minute teeth, and the shortest one is again simple.

According to the observations made at Wood's Hole, the young of *Cancer irroratus* remain in the megalops stage only a very short time, and at the first molt change to a form very near that of the adult. Notwithstanding this, they occurred in vast numbers, and were taken in the towing-nets in greater quantities even than in the zoëa stage. Their time of occurrence seemed nearly simultaneous with that of the zoëæ, and the two forms were almost always associated. The exact time any

particular individual remained in this stage was observed only a few times. One full-grown zoëa (like the specimen figured) obtained June 23, and placed in a vessel by itself, changed to a megalops between 9 and 11½ a. m. of June 24, and did not molt again till the forenoon of June 27, when it became a young crab of the form described farther on. Of two other zoëæ obtained at the same time, and placed together in a dish, one changed to a megalops between 9 and 11½ a. m. of June 24, the other during the following night; these both changed to crabs during the night of June 26 and 27.

The following memorandum on a large number of the same lot of both stages of the young, kept together in a vessel of fresh sea-water, also indicates the rapidity of these changes. In the columns "zoëa" and "megalops" the total number of individuals in each of these stages is given; under "crabs" the number which had appeared since the last observation, and under "dead" the number which had died since the last observation:

Time of observation.	Zoëa.	Megalops.	Crabs.	Dead.
June 23, 7 p. m.	15	22	0	0
June 24, 5 a. m.	5	23	2	7
June 24, 9 a. m.	4	22	2	0
June 24, 11½ a. m.	2	22	1	1
June 24, 7 p. m.	1	22	1	0
June 25, 6 a. m.	0	20	0	3
June 25, 2 p. m.	.....	19	1	0
June 26, 6 a. m.	.....	16	1	2
June 27, 6 a. m.	.....	14	2	0
June 27, 2½ p. m.	.....	12	0	2
June 27, 7 p. m.	.....	11	0	1
June 28, 7 a. m.	.....	9	2	0
June 28, 4 p. m.	.....	4	3	2
June 29, 7 a. m.	.....	2	2	.....

In the two or three instances in which the change from the megalops to the young crab was actually observed, the megalops sank to the bottom of the dish and remained quiet for some time before the molting took place. The muscular movements seemed to be much less violent than in the molting at the close of the zoëa stage, and the little crab worked himself out of the megalops skin quite slowly. For a short time after their appearance the young crabs were soft and inactive, but the integument very soon stiffened, and in the course of two or three hours they acquired all the pugnacity of the adult. They swam about with ease and were constantly attacking each other and their companions in the earlier stages. Many of the deaths recorded in the above memorandum were due to them, and on this account they were removed from the vessel at each observation. In this early stage the young crabs are

quite different from the adult. The carapax is about 3^{mm} long and slightly less in breadth. The front is much more prominent than in the adult, but still has the same number of lobes and the same general form. The antero-lateral margin is much more longitudinal than in the adult, and is armed with the five normal teeth, which are long and acute, and four very much smaller secondary teeth alternating with the normal ones. The antennæ and ambulatory legs are proportionally longer than in the adult. The young crabs in this stage were once or twice taken in the towing-net, but they were not common at the surface, although a large number were found, with a few in the megalops stage, among hydroids upon a floating barrel in Vineyard Sound, July 7.

The young of *Platyonichus ocellatus* in the zoëa and megalops stages were frequently taken in the towing-net from the last of June till August, but they were much less abundant than the young of *Cancer irroratus*. On June 29, however, they occurred in great numbers. Twenty-two out of forty of those in the zoëa state changed to the megalops during the first twenty-four hours, and in the same time ten out of fifty in the megalops stage changed to the adult form, so that they probably do not remain in the megalops state longer than the young of *Cancer irroratus*. They apparently do not molt during the megalops stage.

The megalops of the *Platyonichus* is about the size of that of *Cancer irroratus*, and resembles it much in general appearance, but the carapax is much broader in proportion, the rostrum is a little longer, and there is a marked prominence at the anterior margin of the orbit, representing the lateral tooth of the front of the adult, and a similar prominence, representing the stout postorbital tooth, at the posterior angle of the orbit. The spine upon the cardiac region is rather more slender than in the megalops of the *Cancer*. The chelipeds are more elongated, and much like those of the adult *Platyonichus*, except that they want the stout spines of the latter. The dactyli of the posterior legs already approach in form those of the adult, being expanded into narrow oval plates a fourth as broad as long. The tips of each of these dactyli are furnished with four peculiar setæ of different lengths and with strongly curved extremities, the longest and two shortest of which are simple, while next to the longest one is furnished along the inner side of the curved extremity with little, closely set, sack-like appendages.

Another megalops, belonging apparently to some swimming-crab, was several times taken in the towing-net, in Vineyard Sound, from August 11 to September 3, and was also taken by Mr. Harger and myself, east of George's Bank, latitude 41° 25′ north, longitude 63° 55′ east, September 14. It would fall in the genus *Cyllene* of Dana, and is closely allied to his *Cyllene furciger* (Crust. U. S. Expl. Expd., p. 494, Plate XXXI, fig. 8) from the Sooloo Sea. In one specimen the carapax, including the rostrum, is 2.0^{mm} long, excluding rostrum, 1.6^{mm}, breadth, 1.1^{mm}. The front is quite narrow between the bases of the ocular peduncles, and has a long and slender rostrum. There are no prominences either side

of the orbit and no dorsal spine upon the carapax. The fourth segment of the sternum is armed each side, just within the bases of the legs, with a long and broad spine projecting backward and slightly outward, as in *Cyllene furciger*. The chelipeds and ambulatory legs are long and slender, and the dactyli of the posterior pair of legs are expanded and lamellar, as in the megalops of *Platyonichus*. The abdomen is about as long as the carapax excluding the rostrum, and the fifth segment is armed with a stout spine each side of the postero-lateral angles.

A very large megalops, quite different in structure from those already mentioned, is occasionally found thrown upon outer beaches on the southern coast of New England and Long Island, but is apparently much more common upon the coast of the Southern States. This is undoubtedly the young of *Ocypoda arenaria*, and was long ago described by Say (Journal Acad. Nat. Sci., Philadelphia, vol. i, p. 157, 1817) as *Monolepis inermis*, and it is partially figured by Dana, (Crust. U. S. Expl. Exp., Plate XXXI, fig. 6.) The carapax is very convex above, broader behind, and has no dorsal spine. The front is deflexed sharply downward and a little backward, and the extremity is tricuspidate, the median tooth being long and narrowly triangular, while the lateral teeth are small and obtuse. The sides are high and impressed so as to receive the three anterior pairs of ambulatory legs. The third pair of ambulatory legs are closely appressed along the upper edge of the carapax and extend forward over the eyes, their dactyli being curved down over the eyes and along each side of the front. The posterior legs are small and weak, and each is folded up and lies in a groove on the latero-posterior surface of the carapax. The external maxillipeds have almost exactly the same structure as in the adult *Ocypoda*, and, as in the adult *Ocypoda*, there is a tuft of peculiar hairs between the bases of the second and third ambulatory legs. I have specimens of this megalops from Block Island, and have myself collected it, late in August, at Fire Island Beach, Long Island. In the largest specimen from the last locality the carapax is 6.4^{mm} long and 5.6^{mm} broad.

A large number of young specimens of the *Ocypoda*, collected at Fire Island Beach, indicate plainly that they had only recently changed from this megalops. The smallest of these specimens, in which the carapax is 5.6 to 6.0^{mm} long and 6.1 to 6.5^{mm} broad, differ from the adult so much that they might very easily be mistaken for a different species. The carapax is very slightly broader than long, and very convex above. The front is broad, not narrowed between the bases of the ocular peduncles, and triangular at the extremity. The margin of the orbit is not transverse but inclines obliquely backward. The ambulatory legs are nearly naked, and those of the posterior pair are proportionately much smaller than in the adult.

The adult *Ocypoda* is terrestrial in its habits, living in deep holes above high-water mark on sandy beaches, but the young in the zoëa state are undoubtedly deposited in the water, where they lead a free-